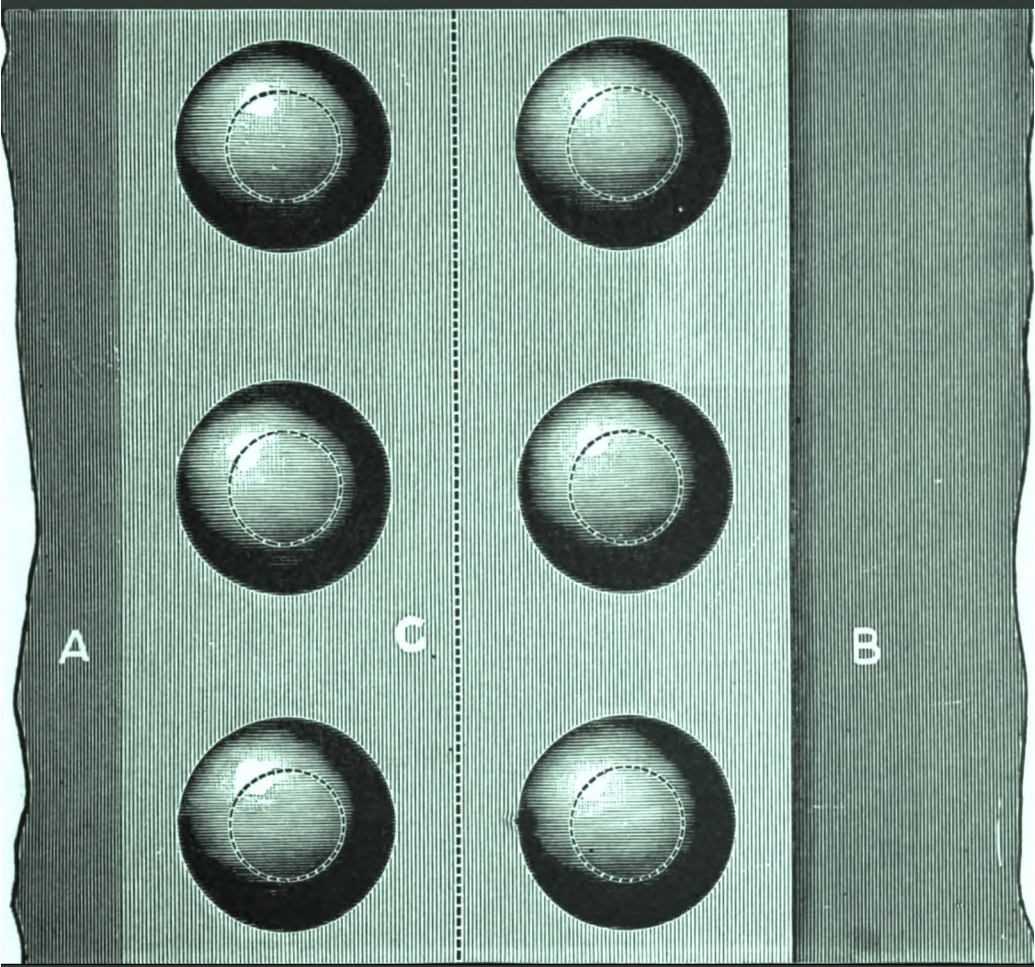

Elementary lessons in steam machinery and the marine ...

Joseph Langmaid, H. Gaisford

Digitized by Google

ELEMENTARY LESSONS

IN

STEAM MACHINERY AND THE MARINE STEAM ENGINE

Digitized by Google

Digitized by Google

Digitized by Google

Digitized by Google

ELEMENTARY LESSONS

IN

STEAM MACHINERY

AND THE

MARINE STEAM ENGINE

WITH A SHORT DESCRIPTION OF THE CONSTRUCTION OF A BATTLESHIP

COMPILED FOR THE USE OF JUNIOR STUDENTS OF MARINE ENGINEERING

BY

FLEET-ENGINEER J. LANGMAID, R.N.

AND

CHIEF-ENGINEER H. GAISFORD, R.N.

NEW EDITION. REVISED AND ENLARGED

London

MACMILLAN AND CO., LIMITED

NEW YORK: THE MACMILLAN COMPANY

1901

All rights reserved

Digitized by Google

Fifth Edition, 1893. *Sixth Edition*, 1901.

Digitized by Google

127307
MAR 23 1909
TJF
.L25

6961524

PREFACE

THE following Elementary Lessons in Steam Machinery were prepared for the Naval Cadets in H.M.S. *Britannia*, and represent a systematic course of simple instruction preparatory to a more thorough study of the whole subject.

The syllabus of subjects dealt with is based on the plan adopted by the Science and Art Department.

The aim of the earlier lessons is to lay a sound basis of instruction in the elements of construction and mechanism, also in those mechanical details which students are usually expected to learn by workshop experience, and are not found in Steam Engine Text-books.

Nothing is stated except the conclusions arrived at by experience, and the simplest examples are given to illustrate the various details of Marine Engines. Untried experiments are not referred to, but the information given is up to date, and obsolete ideas have been as far as possible avoided.

The notes on construction of a Battleship will serve as an introduction to the large subject of modern ship construction, treated of more fully in the Text-book of Naval Architecture, which has been prepared by order of the Admiralty.

J. LANGMAID.
H. GAISFORD.

October 1893.

PREFACE TO THE SIXTH EDITION

THE Editor wishes to express his indebtedness to J. T. Corner, Esq., Inspector of Machinery, R.N., Chief Engineer of Portsmouth Dockyard, and to F. J. Sercombe, Esq., Engineer, R.N., for much valuable assistance in preparing this edition. He is aware that the present is a most unfavourable time for reprinting a book dealing with Naval Boilers; but he has done his best to represent the conditions as they now exist.

Digitized by Google

Digitized by Google

TABLE OF CONTENTS

CONSTRUCTION

LESSON I

PAGES

Measurements, etc.—Exact measurements necessary for machinery to ensure interchangeability of parts, obtained by use of standard rules and gauges. Use of calipers. True plane surfaces necessary, ensured by use of straight edges and surface plates. Definitions of strain and stress. Meaning of tensile and compressive forces, ultimate or breaking strength, factor of safety, safe working load . 3-10

LESSON II

Metals used in Machinery and Ship Construction.—Cast-iron: composed of pure iron and 3 to 5 per cent carbon; crystalline in structure, easily melted and run into moulds prepared from patterns; is brittle; strong to resist compressive, comparatively weak to resist tensile forces; relative strengths 50 tons and 9 tons per sq. in. respectively. Wrought-iron: purest form of iron, fibrous in structure, difficult to melt, can be welded; used for forgings; can be rolled into sheets and drawn into wire; rapidly magnetised and demagnetised; tensile strength 20 to 22 tons per sq. in. with grain, 18 to 20 across grain. Steel: used for cutting instruments, etc., called tool steel; mixture of iron with from 1 to 1½ per cent carbon; made red hot and cooled gradually remains soft; made red hot and cooled suddenly becomes very hard. Hard steel can be tempered by reheating, temper shown by colour on surface; very strong to resist tensile and compressive forces; can be permanently magnetised. Mild Steel: mixture of iron with about ⅛th per cent carbon and a small amount of manganese; almost exclusively used for ship-building and boiler-making; very tough; cannot be tempered; tensile strength 27 to 30 tons per sq. in.; no grain; equally strong in all directions. Malleable Cast-iron . . 11-19

Digitized by Google

LESSON III

PAGES

Metals used in Machinery and Ship Construction.—Metals (continued)—Copper: red colour; can be rolled into sheets and drawn into wire; not so much tensile strength as iron, but can be worked cold; used for making pipes for steam, water, etc.; oxidises slowly; used for sheathing ships; good conductor of electricity; used in the alloys gun metal or bronze, and brass; tensile strength 15 tons per sq. in. Tin: a white metal, used pure to coat iron, copper, etc., to prevent oxidation, and mixed with copper to form gun metal. Zinc: a white metal, used to coat iron, etc., to prevent oxidation—galvanised iron; mixed with copper to form brass, etc.; also for protection from galvanic action. Gun metal or bronze: mixture 88 per cent copper, with 2 per cent zinc, and 10 per cent tin; makes castings of good tensile strength and non-oxidisable. By addition of phosphorus, phosphor bronze obtained, and by addition of manganese, manganese bronze, both having much greater strength than gun metal. Tensile strengths, gun metal 15 tons per sq. in., rolled phosphor bronze 26 tons per sq. in. Brass: common brass, mixture of 70 per cent copper, 30 per cent zinc. Naval brass, 62 per cent copper, 37 zinc, 1 tin; tensile strength 20 tons per sq. in. 20-25

LESSON IV

Riveted Joints.—Rivets. Forms of rivet heads and points in ordinary use, pan-shaped heads, countersunk, conical and snap pointed rivets. Rivet holes drilled or punched, holes in two plates brought exactly in line. Riveting done by hand work or machine, machine work best. Rivets used red hot, on cooling contract and hold plates very firmly. Screw rivet. Single or double rows of rivets used. Lap Joints used for edges of plates; sketch of section of lap joint showing either form of rivet. Butt Joint with butt strap for connecting ends of plates, sketch of section of butt joint showing either form of rivet; double butt straps used for boiler joints, and three rows of rivets. Joint of two plates not in one plane by angle iron (or steel) joint, or by flanged joint (sketch sections of both). Proportion of strength of single and double riveted lap joint to that of solid plate 56 and 70 per cent respectively . 26-39

LESSON V

Screw Threads and Fastenings.—Formation of screw thread. Kinds of threads used: V thread, square thread, rounded and buttress threads. Screw threads formed on cylindrical surfaces by screw-cutting lathe, by dies and taps. Bolt and nut. Pitch of screw thread. To distinguish right and left handed threads. Sketches

Digitized by Google

PAGES

of V and square threaded screws showing thread right or left handed. Single, double, etc., threaded screws. Pitch estimated by number of threads to the inch for ordinary fastenings. "Whitworth" or common threads; fine or gas threads. Bolt heads and nuts made hexagonal, turned by spanners. Use of studs. Methods used to prevent a nut screwed up from slackening back, lock nuts, guards, and set screws 40-55

MECHANISM

LESSON VI

Transmission of Power by Shafts, etc.—Shafts, Bearings, etc. Cylindrical shafts of wrought-iron or mild steel used for transmission of power. Shafts are subjected principally to twisting forces. Strength of solid shafts to resist twisting, proportional to diameter^3. Advantage of using hollow shafts. Two shafts joined by flange coupling (sketch). Universal joint. Method of securing centres or bosses of wheels, etc., to shafts by sunk keys. Disconnecting gear and clutches. Bearings. Supports of shafts called bearings. Sketch of ordinary pedestal bearing; parts of shafts resting in bearings called journals; use of liners. Use of wood bearings; description of bearing for stern shaft of ship lined with lignum vitæ. Joints of working rods. Knuckle joint, use of bushes; marine engine connecting rod showing brasses, etc., for crank pin bearing . . 56-70

LESSON VII

Conversion of Motion.—Explanation of method of converting reciprocating into rotatory motion, illustrated by crank and connecting rod of steam engine, with outline sketch. Meaning of dead points; fly-wheel used with single cylinder engines; two engines with their cranks at right angles, or three engines with cranks at 120°, used in ships. Crank shaft (sketch). Explanation of conversion of rotatory into reciprocating motion by means of eccentric, eccentric strap and rod (sketch). Irregular reciprocating motion obtained from rotatory motion by use of cams 73-81

LESSON VIII

Toothed Gearing.—Toothed wheels necessary to transmit power, short description of spur wheels, bevel wheels with outline sketch, mitre wheels, mortice wheels, pinion, rack and pinion, helical gearing. Trains of wheels used in machines for raising weights, for obtaining increased or decreased velocity ratio in two shafts, or for changing direction of motion. Worm and worm wheel, outline sketch . 82-95

Digitized by Google

LESSON IX

PAGES

Friction.—Resistance to one part of machine sliding over another due to friction. Friction lessened by making surfaces in contact smooth, by making surfaces working together of different metals, by use of lubricants. Action of lubricant in lessening friction, steady supply of lubricant necessary. Sketch of bearing fitted with siphon lubricator. Friction lessened by mechanical means by friction wheels, etc. Heat due to friction. Hot bearings. Examples where friction is useful. Weston's friction clutch (sketch). Brakes. Sketch of winch fitted with band brake 97-105

LESSON X

Stuffing Boxes and Packing, joints of pipes, etc.—Explanation of method of making piston rod of steam engine work steam-tight in cylinder end by stuffing box, gland, and packing (sketch of section). Packing used made of canvas and india-rubber or asbestos. Metallic packing used for high-pressure steam glands. Metallic packing rings used for steam engine pistons, etc. Method of keeping ram of hydraulic press water-tight by cup leather (sketch section). Double cup leather packing used for hydraulic pistons. Steam pipes, etc., joined together by flanges and bolts, kept from leaking by red lead cement, etc. Riveted joints caulked 107-114

LESSON XI

Valves and Cocks, used in machinery for regulating or controlling the admission or discharge of steam, water, etc.—1. Valves opened and closed by hand. Description of ordinary stop valve, with conical seated valve (outline sketch of section). Lift need not exceed one-fourth diameter of opening. Usually fitted to close with right-hand motion. 2. Valves opened and closed by self-acting mechanism. Description of slide valve of steam engine. 3. Valves opened and closed by the pressure of a fluid. Description of india-rubber disc valve. Metallic valve. Description of non-return valves, ball valves, safety valves, escape valves. Cocks,—Description of ordinary straightway cock (sketch), sideway cock, threeway cock. Position of score on end of plug tells whether cock is shut or open 117-131

LESSON XII

Pumps.—Explanation of working of lift pump, outline sketch, limit of working. Explanation of working of force pumps, outline sketches of single and double-acting force pumps. Hydraulic jack. Explanation of working of centrifugal pump, its advantages and disadvantages. Outline sketch, showing direction in which vanes revolve. Air fans. Ejectors 132-142

Digitized by Google

THE MARINE STEAM ENGINE

BOILERS AND BOILER MOUNTINGS

LESSON XIII

PAGES

Boilers.—Advantage of cylindrical over square form. Names and uses of parts: shell, front, back, furnaces, combustion chamber, tubes, heating surfaces, tube plates, furnace bars, grate surface, ash pit, bearing bars, furnace door, ash-pit door or draught plate, bridge, water line, steam space, water space, stays, stay tubes, man-hole doors, mud-hole doors, smoke box, uptake, funnel, damper, air casing, lagging. Sketch (section through furnace, etc.) of cylindrical "return tube" marine boiler 145-153

LESSON XIV

Boilers (continued).—"Double-ended return tube" boiler. Sketch (section through furnace, etc.) of "Through tube" boiler. "Locomotive" boiler, fusible plug. Tubulous boilers. Preservation of boilers 154-177

LESSON XV

Combustion.—Composition of coal; definition of combustion; supply of air necessary; how obtained, natural draught, steam blast, forced draught, air-pressure gauge, funnel exhaust; boiler tube ferrules; description of laying and lighting fires 178-184

LESSON XVI

Evaporation.—Latent heat of steam. Total heat of evaporation . 185-187

LESSON XVII

Fittings of Boilers.—Description and uses of internal steam pipe, stop valve (sketch section of automatic stop valve), auxiliary stop valve, safety valves (sketch section), glass water gauges (sketch), test cocks, Bourdon pressure gauge (sketch), main and auxiliary feed valves. Automatic feed regulation. Brine, scum, or blow-off valves. Density of water in boilers. Hydrometer . . 188-198

LESSON XVIII

Main Steam Pipe, Expansion Joints (sketch section), Separator (sketch section) 199-200

Digitized by Google

MARINE ENGINES

LESSON XIX

PAGES

Sectional elevation of vertical direct acting marine engine, with names and description of parts. Engines,—The cylinder and its fittings, sketch of piston and its parts; piston rod, guide block, guides, piston rod crosshead, connecting rod, crank, crank shaft, main bearings, sole or bed plate 203-214

LESSON XX

Sketch of section of cylinder, with movable piston and slide valve, description of working of single ported slide valve, description and advantages of double ported slide valve, and of piston valve. Balance piston. Method of working slide valves by eccentrics, eccentric straps and rods, meaning of lap, lead, and angular advance. Go-ahead and go-astern eccentrics, etc., necessary. Sketch and description of link motion and reversing gear . . 217-228

LESSON XXI

Condensation of steam, vacuum, vacuum gauge, surface condenser (sketch section); use of air, circulating and feed pumps. Changes in steam passing from boiler through engine and back to boiler. Jet condenser. Advantage of surface over jet condensation . 229-235

LESSON XXII

Expansion of steam; advantage of using high-pressure steam expansively; compound and triple expansion engines. Sketches and description of engines of H.M. ships *Sappho* and *Scylla* . . 236-244

LESSON XXIII

Explanation of Work and Horse Power.—The indicator and indicator diagrams 245-254

LESSON XXIV

Propulsion by Screw Propellers.—Sketch and description of screw propeller. Sketch and description of thrust bearing. Meaning of pitch and slip. Advantages of twin screws. Efficiency of the marine steam engine 257-264

SHORT DESCRIPTION OF THE CONSTRUCTION OF A BATTLESHIP . 265-285

INDEX 287-291

Digitized by Google

LIST OF ILLUSTRATIONS

FRONTISPIECE. DOUBLE-ENDED RETURN TUBE MARINE BOILER.

CONSTRUCTION

FIG.		PAGE
1.	Ring and Plug 1 inch Standard Gauge	2
2.	Outside and Inside Calipers	5
3.	Composition of Gun Metal	23
4.	Composition of Brass	23
5.	Composition of Muntz Metal	23
6.	Composition of Naval Brass	23
7.	Form of Rivet before Use	28
8.	Rivets with Machine-made Heads	28
9.	Rivets with Hand-made Heads	28
10.	Countersunk Head Rivet	28
11.	Screw Rivet	28
12.	Double Riveted Lap Joint	31
13.	Single Riveted Single Butt Strap Joint	33
14.	Double Butt Strap Treble Riveted Joint	35
15.	Angle-iron Joint	37
16.	Flange Joint	37
17.	Formation of a Screw Thread	41
18.	Shape of Different Threads	41
19.	Bolt and Nut	45
20.	Short Length of Right-handed Square Thread	45
21.	Short Length of Left-handed Square Thread	45
22.	Construction of Whitworth Thread	47
23.	Method of Showing Rough Sketch of Screw Thread	47
24.	Stud and Nut	49
25.	Double Lock Nuts	49
26.	Nut secured by Split Pin	51
27.	Nut held by Set Screw	53
28.	Nut held by Guard	53

Digitized by Google

MECHANISM

FIG.		PAGE
29.	Flange Coupling	58
30.	Universal or Hooke's Joint	58
31.	Section showing Boss of Wheel secured to Shaft by Sunk Key	60
32.	Pedestal Bearing or Plummer Block	63
33.	Cross Section of Shaft in Lignum Vitæ Bearing	65
34.	Knuckle Joint	65
35.	Connecting Rod	67
36.	Outline Sketch illustrating Conversion of Motion by means of Connecting Rod and Crank	72
37.	Crank Shaft	75
38.	Sketch illustrating Conversion of Motion by means of Eccentric with Strap and Rod	77
39.	Cam	80
40.	Rolling Contact	83
41.	A Pair of Toothed Wheels	83
42.	A Pair of Spur Wheels	87
43.	A Pair of Bevel Wheels	87
44.	A Mortice Wheel	87
45.	A Pair of Double Helical Toothed Wheels	87
46.	A Train of Four Wheels	91
47.	Hour and Minute Hands of a Clock or Watch	93
48.	Mitre Wheels, used for changing direction of motion of Shafts	93
49.	Worm and Worm Wheel	95
50.	Siphon Lubricator on Pedestal Bearing	99
51.	Friction Wheels	99
52.	Weston's Friction Clutch	103
53.	Double Purchase Crab, fitted with Band Brake	105
54.	Section of Stuffing Box and Gland	109
55.	Section showing Cup Leather of Bramah Press	109
56.	Double Cup Leather of Hydraulic Piston	112
57.	Method of Joining Pipes together by Flanges	112
58.	Method of Caulking Joints of Plates in Boilers	115
59.	Ordinary Stop Valve	119
60.	Ordinary Slide Valve	119
61.	India-rubber Disc Valve	122
61A.	Metallic Valve, Ring Pattern	123
61B.	Metallic Valve, Disc Pattern	126
62.	Pump Valve (non-return)	129
63.	Ordinary Straightway Cock	129
64.	Ordinary Lift Pump	134

Digitized by Google

FIG. PAGE
65. Single Acting Force Pump 137
66. Double Acting Force Pump 137
67. Hydraulic Jack 139
68. Centrifugal Pump 143
69. Outline Section of Boat showing Ejector 143

MARINE BOILERS AND THEIR MOUNTINGS

70. Front View, with Section across Furnaces, etc. } "Return Tube" Marine Boiler . 148
71. Section through Furnace, etc. . . } . 148
72. Front View, with Section across Furnaces, etc. } "Through Tube" Marine Boiler . 156
73. Section through Furnace, etc. . . } . 156
74. Belleville Boiler 160
75. Babcock and Wilcox Boiler 164
76. Niclausse Boiler 167
77. Thornycroft Boiler, "Speedy" Type 170
78. Thornycroft Boiler, "Daring" Type 173
79. Method of Measuring Forced Draught 181
80. Boiler Tube Ferrule 181
81. Self-closing Stop Valve 191
82. Safety Valve 191
83. Glass Water Gauge 195
84. Bourdon's Pressure Gauge 195
85. Expansion Joint 201
86. Separator 201

MARINE ENGINES

87. Sectional Elevation of Vertical Direct Acting Engine . . 205
88. Cylinder and Liner 208
89. Cylinder and Liner 208
90. Sketches showing Details of Piston 211
91. Sketch of Section of Cylinder, with Movable Piston and Slide Valve 216
92. Section of Double Ported Slide Valve 221
93. Piston Slide Valve 221
94. End View of Link Motion 225
95. Section through Surface Condenser 231
96. Detail of Condenser Stuffing Box 231
97. Various Types of Engines 240
98. Triple Expansion Engines of H.M. ships *Sappho* and *Scylla*. *face* 242
99. Richards' Indicator 248

Digitized by Google

FIG.		PAGE
100.	Theoretical Indicator Diagram	251
101.	Practical Indicator Diagram	251
102.	Screw Propeller	256
103.	Thrust Bearing	259

NOTE.—Figs. 17, 20, 21, 30, 41, 46, 48, 49, 61, 63, 103, have been kindly drawn by J. H. Spanton, Esq., of H.M.S. *Britannia*, to whom thanks are due for very valuable hints as to others.

Figs. 53 and 67 are taken by permission from Messrs. Tangyes' Copyright Catalogue, 1891.

Digitized by Google

Digitized by Google

ELEVATION.

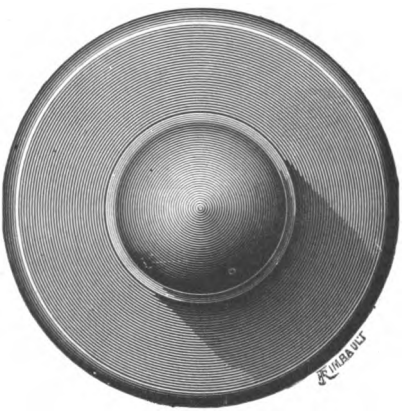

PLAN.

FIG. 1.—RING AND PLUG 1″ STANDARD GAUGE.

Digitized by Google

CONSTRUCTION

LESSON I

MEASUREMENTS, ETC.

Exact measurements necessary for machinery to ensure interchangeability of parts, obtained by use of *standard rules* and *gauges.* Use of *Calipers.*

True Plane surfaces necessary, ensured by use of *straight edges* and *surface plates.*

Definitions of *strain and stress.* Meaning of *tensile* and *compressive forces, ultimate* or *breaking strength, factor of safety, safe working load.*

Every complicated piece of machinery, such as the steam engines fitted in modern ships, is composed of a number of separate parts, each of which has its own duty to perform. Some of these parts will be found in all engines and machines, and by studying their construction, the materials of which they are made, and the principles on which they act, we shall be in a position to understand the complete machine much more readily.

First, we must consider the methods of taking *measurements* and of making a few simple calculations, which we shall find necessary later on.

In constructing steam or other machinery, measurements are usually made in *feet, inches, and fractions of an inch,* and these measurements must be very accurate and exactly adhered to, so as to ensure any number of copies of the same piece of mechanism being exactly alike, and corresponding parts

Digitized by Google

interchangeable. Besides other advantages, spare parts can be carried with the certainty of their fitting.

In drawings of machinery, feet are marked thus ′ and inches thus ″, so that 3′ 6″ would mean 3 feet 6 inches.

Cylindrical surfaces are measured by *gauges*, "ring" and "plug," similar to those represented in Fig. 1. The particular pair represented are exactly *one inch* inside and outside measurement and are called the "standard gauges" of one inch. The plug fits the ring so accurately that no air can pass between them. Gauges have been made to measure to the *millionth* part of an inch, and, as an example of accurate measurement, we might take the service magazine rifle, the calibre of which is ·303 of an inch, showing that measurements are taken to the one thousandth part of an inch.

Calipers (Fig. 2) are used for taking ordinary measurements: in the case of cylindrical surfaces, "outside" calipers are used for convex surfaces such as the "plug" gauge, "inside" calipers for concave surfaces such as the "ring." The size is read off by placing the calipers on a graduated rule.

Flat surfaces are measured by a "two foot" or similar rule, which is usually graduated in "eighths," "sixteenths," "thirty-seconds," and "sixty-fourths" of an inch, for engine work, and in "tenths," "hundredths," etc., for gun and torpedo work.

Truly flat surfaces are ensured by the use of "straight edges" and "surface plates."

A "straight edge" is usually a thin bar of steel with its two thin edges made perfectly true and straight.

A "surface plate" is a cast-iron plate whose upper side has been planed and made perfectly level and smooth. If one surface plate be placed on another, so that their two smooth surfaces are in contact, it will be found that they adhere so firmly that a considerable force is necessary to pull them asunder. This is due to the molecular attraction of the bearing points which are brought into close contact owing to the near approach to absolute truth of surface.—Aldous's *Physics*, p. 137.

Digitized by Google

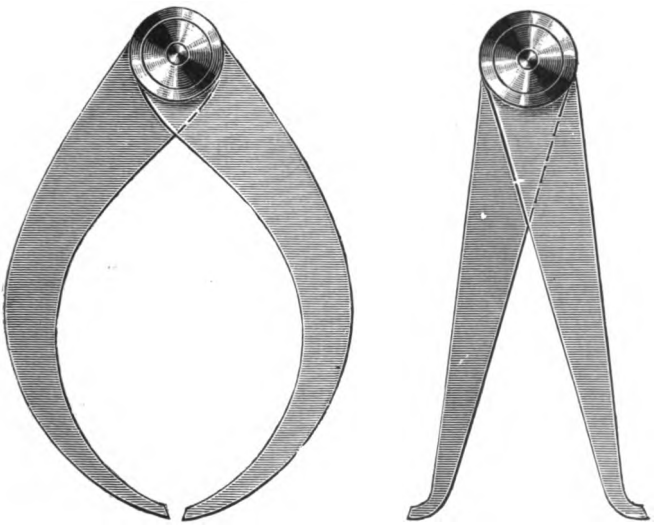

FIG. 2.—OUTSIDE AND INSIDE CALIPERS.

Digitized by Google

Digitized by Google

A part of a piece of machinery which requires to be exactly flat and even, is made approximately so by special planing machines and finished by hand work, being compared from time to time with a straight edge or surface plate and worked at till the necessary degree of truth is reached.

To ensure accuracy in the production of irregular forms *templets* are used; each piece of machinery made has to fit the templet accurately and so be made interchangeable.

It is very often necessary to find the area of circular plane surfaces and the cubic content of cylinders and other solid bodies and the following formulæ should be remembered:—

Area of circle $= \pi r^2$.
Where $\pi = 3{\cdot}1416$ or $\frac{22}{7}$ (nearly),
and r = Radius of circle;
or Area of circle $= d^2 \times {\cdot}7854$.
Where d = Diameter of circle.
Volume of cylinder = Area of base × Perpendicular height.

Example.—What is the area of one end of a cylindrical boiler 10 feet in diameter, and what is the total pressure on that end in tons when the steam gauge shows 150 lbs. per sq. in.?

Here Area $= d^2 \times {\cdot}7854$
$= 100 \times {\cdot}7854$
$= 78{\cdot}54$ sq. ft.
Pressure on end $= \frac{78{\cdot}54 \times 144 \times 150}{2240}$
$= 757{\cdot}35$ Tons.

The following constants are useful:—

One gallon measures	277·274 cubic inches.
„ „ fresh water weighs	10 lbs.
One cubic foot contains	6·25 gallons.
„ „ „ fresh water weighs	1000 ounces = 62·5 lbs.
One cubic foot of sea water „	64 lbs.
One cubic foot of iron „	480 lbs. (about).
35 cubic feet of sea water weigh	one ton.
35·84 „ „ fresh „ „	„

Example.—How many tons of fresh water would a tank of the following *inside* dimensions hold?

Digitized by Google

Length 5 feet, Breadth 4 feet, Height 4 feet.

Here No. of cu. ft. in tank $= 5 \times 4 \times 4$
$= 80$

No. of tons of fresh water, tank would contain $= \frac{80}{35 \cdot 84}$
$= 2 \cdot 23$

Example.—What would be the approximate weight of an armour plate of the following dimensions:—Length 6 feet, Breadth 5 feet, Thickness 9 inches?

Here solid content of armour plate $= 6 \times 5 \times \frac{3}{4}$ cu. ft.
Weight of armour plate $= 6 \times 5 \times \frac{3}{4} \times 480$ lbs.
$= 4 \cdot 82$ tons (nearly).

We will now consider the meaning and application of some of the terms we shall have to refer to hereafter:—

STRAIN.—Every load or force acting on a structure tends to produce a change of form, which is termed the *strain* due to the load.

STRESS is a force which tends to produce a strain. *Stresses are measured by the force per unit of area which is exerted.*

TENSILE STRAIN is the term usually employed by practical men instead of tensile stress—a stress which tends to stretch the body acted upon.

COMPRESSIVE STRESS.—A stress that tends to force the particles of the body acted upon closer together. For instance, the iron or steel columns which support buildings, roofs, etc., are subjected to a *compressive stress.*

TORSIONAL STRESS or *Twisting Force.*—The propeller shafting of an engine is subjected to this force, the engines tending to turn the propeller in one direction and the water resisting it in the other.

BENDING FORCE.—A bar supported at the two ends and loaded in the middle is subjected to a *bending force.*

Digitized by Google

SHEARING STRESS is a force which tends to produce distortion. The subject of Forces is discussed in Aldous's *Physics*, pp. 62-63. Pieces of iron plate overlapping each other, are fastened together by a rivet, and pulled on, the tendency is for the rivet to be cut as if by a pair of shears. The rivet is then said to be subjected to a *shearing force.*

These forces are resisted in parts of machines by making use of materials best suited to withstand them.

LIMIT OF ELASTICITY.—The *limit of elasticity* of solid bodies is the greatest force which they can exert per unit area to resist distortion: if a greater stress be applied, the body either breaks or is incapable of regaining its original shape.

The *ultimate* or *breaking* strength of a material is the stress required to produce fracture in some specified way, and is usually determined by experiment.

The *safe working load* of a material is the load it will bear without any fear of fracture; it is usually some fraction of the ultimate strength.

It is obvious that the ordinary working load on a machine must be less than the breaking load. Practical experience has shown that it must be very considerably less. But in general it is not possible to determine by direct experiments what should be the working load, while it is easy to determine what is the breaking strength. Hence has arisen the custom of ascertaining the breaking strength of different parts of machines and dividing it by a factor, termed a "factor of safety," to find the proper working load. The factor of safety has been determined by comparing the working and breaking strength in actual cases. Some parts of machines have been subjected to a given straining action for a long time and have shown no signs of failing; others have broken down. In the former cases the factor of safety must have been sufficient, in the latter it must have been too low. By comparison of such cases, values of factors of safety suitable for different materials and in different circumstances

Digitized by Google

have been ascertained, and are now well known for ordinary materials subjected to various kinds of stresses.

Factor of Safety.—The "factor of safety" is the number by which the ultimate strength is divided to obtain the "safe working load,"

$$\text{or} \qquad \text{Factor of safety} = \frac{\text{ultimate strength}}{\text{safe working load}}.$$

Example.—Supposing the ultimate tensile strength of mild steel to be 27 tons per sq. in. What load could be supported by a two inch square bar of that material, assuming a factor of safety of 5?

$$\text{Here Factor of safety} = \frac{\text{ultimate strength}}{\text{safe working load}}.$$

$$\text{That is, } 5 = \frac{27 \times 4}{x};$$

$$\therefore x = 21{\cdot}6 \text{ tons.}$$

Digitized by Google

LESSON II

METALS USED IN MACHINERY AND SHIP CONSTRUCTION

Cast-Iron.—Composed of pure iron and 3 to 5 per cent *carbon; crystalline* in structure, easily melted and run into *moulds* prepared from *patterns;* is brittle; strong to resist *compressive*, comparatively weak to resist *tensile* stresses; relative strengths, 50 tons and 9 tons per sq. in. respectively.

Wrought-Iron.—Purest form of iron, *fibrous* in structure, difficult to melt, can be *welded;* used for forgings; can be rolled into sheets and drawn into wire, rapidly magnetised and demagnetised; *tensile* strength 20 to 22 tons per sq. in. *with grain*, 18 to 20 *across grain.*

Steel.—Used for cutting instruments, etc., called tool steel; mixture of iron with from 1 to $1\frac{1}{2}$ per cent carbon; made red hot and cooled *gradually* remains *soft;* made red hot and cooled *suddenly* becomes *very hard.* Hard steel can be *tempered* by reheating, *temper* shown by colour on surface; very strong to resist tensile and compressive stresses; can be *permanently magnetised.*

Mild Steel.—Mixture of iron with about $\frac{1}{5}$th per cent *carbon* and a small amount of *manganese;* almost exclusively used for shipbuilding and boiler-making; very tough; cannot be tempered; tensile strength 27 to 30 tons per sq. in.; no grain; equally strong in all directions.

Malleable Cast-Iron.

By far the most important of these metals is IRON, using the term in its most general sense to comprise the three forms in which it is used, viz.: *Cast-iron, Wrought-iron, Steel.*

Iron is very rarely found in the metallic state, but is

Digitized by Google

generally combined with *oxygen* and *carbonic acid* and mixed to a greater or less extent with *clay* and *earthy matters.* In this condition it is called *iron ore.*

To obtain metallic iron, the ore is first roasted in a special furnace and the carbonic acid driven off; it is then mixed with coal or coke and a little lime, and put into a *blast furnace.* These furnaces are circular, from 70 to 80 feet in height, and about 24 feet inside diameter; built up of rings of iron plates, and lined with firebricks, fireclay, etc. They are kept alight for months at a time, fresh charges of ore, etc., being thrown in at frequent intervals. A strong current, or *blast* of heated air, is forced through tubes into the lower part of the furnace, where a very high temperature is maintained; this causes the iron to melt and separate from the ore. The earthy constituents of the ore unite with the lime and form a fusible glassy substance called *slag,* which can be drawn off when necessary. When sufficient molten metal has collected at the bottom of the furnace a special hole is unplugged and the iron allowed to run into a series of shallow gutters. When cold it is broken into pieces about 2 or 3 feet long, called "*pigs.*" The metal resulting from this first process contains from 3 to 5 per cent of carbon, and is known as "*pig-iron.*" Only a part of this carbon is actually in chemical combination with the iron, the remainder being diffused throughout the mass in the form of *graphite* or plumbago.

The properties of different brands of pig-iron vary considerably according to the quality of the ore from which they are produced and to the proportion of carbon actually combined with the iron. The iron that contains the greatest quantity of carbon in combination is called "white pig-iron," from the crystalline appearance at the fracture. It is very hard and brittle, and unsuitable by itself for foundry purposes.

Iron in which the greater portion of the carbon is diffused throughout the mass in small particles of plumbago, is called "gray pig-iron," as the fracture has a grayish colour. This is much softer and tougher than the white iron, and is generally

Digitized by Google

used for making castings, being mixed with some of the whiter varieties to give it sufficient strength and hardness for the purpose for which it is intended.

CAST-IRON.—Cast-iron or pig-iron mixed in proper proportions, re-melted, and cast in *moulds* prepared from *patterns* of the article required, was till within the last few years extensively used in all engineering work, from its low first cost, its strength, and the facility with which it could be cast into any form; but its place is being taken by *cast mild steel* (p. 18).

The great objection to the use of cast-iron, especially for parts that have to stand severe strains, is the uncertainty that exists as to its actual strength in any particular instance in consequence of the unequal and unknown stresses brought on the material during the process of cooling in the mould. In cooling, thin castings contract about $\frac{1}{1\,6}''$ per foot; whilst in thick castings the contraction is as much as $\frac{1}{8}''$ per foot.

Great care has to be exercised in making castings to arrange the various parts so that there shall be no loss of strength from this cause.

Cast-iron is also liable to have its strength reduced by the existence of *blow holes* or *gas bubbles* underneath the surface, which, if at any depth, cannot generally be discovered.

CHILLED CASTINGS.—If molten gray pig-iron be cooled rapidly when poured into a mould, some of the free carbon will combine with the iron, and white cast-iron will be formed. This property is taken advantage of where any particular portion of a casting is required to be made harder than the rest, as for example the points of conical iron shot or shell.

In such cases the mould at the part where the casting is required to be hard is made of iron or steel, so that heat will be conducted away rapidly. Such castings are usually known as *chilled castings*. The depth to which the iron will be affected by the *chilling* will vary with the original quality of the iron used and the arrangements adopted for carrying off the heat.

Digitized by Google

The strength and hardness of the points of conical chilled projectiles are also due to the crystals of cast-iron arranging themselves at right angles to the surface in cooling.

In all castings the outermost layer, which is in contact with the sand of the mould, will cool more rapidly than the other parts, and consequently the outer surface or *skin* of the casting will be harder and stronger than the parts nearer the centre.

The strength of cast-iron under the action of a compressive or crushing load is much greater than it is when subjected to tension; its resistance to crushing being about 50 tons per sq. in., whilst its average tenacity is only about 9 tons per sq. in.

WROUGHT-IRON.—Wrought-iron is produced from pig-iron by a process called *puddling*, which is performed in a *reverberatory* or air furnace; that is, a furnace in which the fuel is burnt in a chamber separated from that in which the iron is, by a low wall, above which the two chambers communicate; the heating of the hearth of the furnace being mainly accomplished by gas or flame from coal, without the metal coming into contact with the fuel.

The cast-iron is mixed with about $\frac{1}{5}$th of its weight of *hammer scale* (black oxide of iron). As the temperature of the furnace rises, the oxygen from the air and from the hammer scale combines with the carbon in the cast-iron, forming carbonic oxide which passes off. The "puddler," as the workman is called, stirs up the molten metal with an iron bar or *paddle* passed into the furnace through a small working door; and after a time small clotted lumps of purified iron separate or *come to nature*. These he rolls about until he has 5 or 6 lumps, each about 60 lbs. in weight. The working door is then closed and the furnace raised to a full welding height (about 1500° Fahr.).

Each lump is then lifted out of the furnace by an iron rod which is pressed into it, and put under a steam hammer, where it is quickly knocked into a rectangular block. It is afterwards reheated and hammered or rolled as necessary.

Until very recently wrought-iron was generally employed in

Digitized by Google

constructing the hulls of steam-ships, and in making boilers, crank and propeller shafting, and nearly all the moving parts of the engines. It is very tough and strong and has a fibrous structure which renders its resistance to tension much greater than its resistance to compression. It is *malleable* and *ductile*, that is, capable of being rolled into sheets and drawn into wire. It possesses the property of *welding*, that is, two separate pieces when made white hot and placed together and hammered become one. This very much increases the usefulness of wrought-iron and enables it to be utilised for making large forgings. The tensile strength of good wrought-iron, such as was used for boiler plates, etc., is 20 to 22 tons per square inch *with* the grain, and 18 to 20 tons *across* grain. Wrought-iron possesses the peculiar property that it can be very rapidly magnetised, and very rapidly loses its magnetism; this property makes it very useful for making electro-magnets, etc.

Case Hardening.—The outer skin in many finished wrought-iron pieces of machinery is made hard to resist wear from friction, by the process of *case hardening*. This consists in embedding the iron in some substance containing a large amount of carbon, such as bone dust and cuttings of horn and leather, and raising it to a red heat, by which means the outer layers acquire sufficient carbon to convert them into steel. The depth of the hardening depends on the time occupied in the process. Another and quicker method is to sprinkle the iron when heated to redness with "prussiate of potash," and then plunge it into water.

STEEL.—The term steel is applied to all compounds of *iron and carbon*, in which the proportions of combined carbon are between ·1 and 1·5 per cent. The properties of the materials thus included under a common name vary very greatly according to the amount of carbon they contain.

TOOL STEEL is the name given to steel having a percentage of carbon between 1 and 1·5. Steel is produced either by the

Digitized by Google

addition of carbon to wrought-iron, or by the abstraction of carbon from cast-iron and the subsequent addition of the requisite amount of carbon. Much of the highest class of steel is now made by the addition of carbon in the form of charcoal to Swedish iron, which is cut up and placed with the charcoal in a crucible. The method of adding carbon to wrought-iron, which is called *cementation*, was used until lately for the production of all English steel. It consists in embedding bars of wrought-iron in charcoal and exposing them to a high temperature for a considerable period, during which time a portion of the carbon combines with the iron. The amount of carbon absorbed by the iron is regulated by the time it is kept at a high temperature in contact with charcoal. About four days are necessary for steel containing 1 per cent of carbon used for making tools subject to rough usage, such as chisels and shears for cutting metals. About seven days are required for steel for making drills, turning and planing machine tools, etc., containing $1\frac{1}{4}$ per cent carbon; while for the highest classes of tools and instruments which are required to take and keep a keen cutting edge, and containing about $1\frac{1}{2}$ per cent carbon, ten days or more are required. These steel bars are cooled gradually, and then are found to have bubbles or blisters on their surface, and are called *blister steel.*

Shear steel, which is used for making tools subject to rough use, is obtained from blister steel, with low percentage of carbon, by heating several bars sufficiently and welding them together.

Cast-steel, which is the hardest, strongest, and most compact description of steel, is produced by breaking high carbon blister steel into small pieces and melting them in a crucible, the carbon being thus evenly distributed throughout the metal. This material is used for all cutting tools and instruments which require sharp and well-defined cutting edges. It is very brittle at high temperatures, so that it can only be forged with great care and cannot be welded.

Digitized by Google

Hard cast-steel can be permanently magnetised; compass needles, etc., are made of this material.

MILD STEEL.—Steel is also made by removing all the carbon from pig-iron and adding the requisite proportion of carbon, so as to produce steel of the quality desired.

The metal thus made is usually a low carbon steel, called "mild steel." This material, the percentage of carbon in which is below ·5, very closely resembles the best wrought-iron, except that it has no grain and is equally strong in all directions.

Bessemer Steel.—In the process invented by Sir H. Bessemer and called the *Bessemer* process of making steel, molten pig-iron is poured into a vessel called a *converter*, through which a strong blast of air is forced. The oxygen of the air unites with the carbon of the cast-iron and carries it away. After all the carbon has been removed, this almost pure iron has added to it a small quantity of *spiegeleisen* (looking-glass iron) which has a known amount of carbon. Thus a mixture is made containing the exact amount of carbon required. The steel thus made is poured into moulds and formed into *ingots*, which are afterwards hammered, rolled, and worked as required.

Siemens-Martin Steel.—In this process of making steel, the great heat produced in a Siemens gas furnace is used for treating a bath of molten pig-iron with clean iron ore, scrap-iron, etc., so as to produce steel with the requisite proportion of carbon. An addition of the metal *manganese* is found very useful in improving the quality of the steel.

The principal advantage of this system of producing mild steel is that it is not dependent on a limited time for its results as is the case in the Bessemer process. The heat of the furnace is such that the fluid bath of metal, after having all its carbon removed, may be kept molten for any reasonable length of time, during which such additions of iron ore, etc., may be made as are found necessary to adjust it to the proper quality, samples being taken from time to time for testing. Thus uniformity

Digitized by Google

may be secured in all the metal produced. This material has the advantage of being about 25 per cent stronger than iron, is very tough, has no grain, and so is equally strong in all directions, and it is on this account generally used for boiler and ship plates ; these plates have a tensile strength of from 27 to 30 tons per square inch.

Mild Steel Castings.—Castings of mild steel are now being much used to take the place of heavy expensive machinery and ship forgings; but they have the disadvantage of not being absolutely reliable as to soundness, owing to cavities or blow-holes in the metal, which may be under the surface and so hidden from view.

Whitworth Fluid Compressed Steel.—Sir Joseph Whitworth has overcome this difficulty mechanically by subjecting the metal while setting in the mould to great pressure by the use of hydraulic presses. By this means mild steel castings of great uniformity and strength are produced ; but the process is very expensive. In the marine engine it is used principally for the inside part or working barrels of steam-engine cylinders and the crank and propeller shafting.

Tempering.—Steel with a large proportion of carbon is distinguished from wrought-iron and low carbon steel by its being able to be *tempered,* by which means it may be made very hard and brittle, or so soft as to be easily cut with a file, etc. If tool steel be made red hot and cooled very *gradually* it remains soft, but if cooled *suddenly* it becomes very hard. The hard steel may have its hardness reduced to any degree required by reheating it a certain amount. This process is called tempering. Steel with less than about ·3 per cent of carbon cannot be hardened.

The usual method adopted in practice for hardening tools is to first make as much of them as is necessary red hot, and then to harden the cutting edges by cooling them suddenly in water, afterwards allowing their temperature to increase by the conduction of heat from the adjoining thicker portions of the tool

Digitized by Google

until it reaches the desired point, when the whole of the tool is cooled to fix or set the temper. The instant when this should be done will vary with the purpose for which the tool is required, and will be indicated by the colour shown by a thin film of oxide formed on the surface as its temperature increases.

The approximate temperatures corresponding to the various tints are shown in the following table :—

Temp. Fahr.	Colour.	Temper.
430°	Very faint yellow	Lancets.
450°	Pale straw	Razors and surgical instruments.
470°	Full yellow	Penknives.
490°	Brown	Scissors and cold chisels.
510°	Brown, with purple spots	Axes, plane-irons, pocket-knives.
530°	Purple	Table-knives, large shears.
550°	Bright blue	Swords, watch-springs.
560°	Full blue	Fine saws, augers.
600°	Dark blue	Hand and pit saws.

MALLEABLE CAST-IRON.—Small iron castings can be made much less brittle, and so better able to stand rough usage, by surrounding them with oxide of iron, etc., and heating to a high temperature, which is maintained for as many hours as found necessary by experience. During this process part of the carbon is removed from the cast-iron, and it becomes tough like wrought-iron.

Digitized by Google

LESSON III

METALS USED IN MACHINERY AND SHIP CONSTRUCTION

Metals (*continued*)—**Copper.**—Red colour; can be rolled into sheets and drawn into wire; not so much tensile strength as iron, but can be worked *cold*; used for making pipes for steam, water, etc.; oxidises slowly; used for sheathing ships; good conductor of electricity; used in the alloys *gun metal* or *bronze*, and *brass*; tensile strength 15 tons per sq. in.

Tin.—A white metal, used pure to coat iron, copper, etc., to prevent oxidation, and mixed with copper to form *gun metal.*

Zinc.—A white metal, used to coat iron, etc., to prevent oxidation —*galvanised iron*; mixed with copper to form *brass*, etc.; also for protection from galvanic action.

Gun Metal or **Bronze.**—Mixture 88 per cent *copper*, with 2 per cent *zinc*, and 10 per cent *tin*: makes castings of good tensile strength and non-oxidisable. By addition of *phosphorus*, *phosphor bronze* obtained, and by addition of *manganese*, *manganese bronze*, both having much greater strength than gun metal. Tensile strengths, gun metal 15 tons per sq. in., rolled phosphor bronze 26 tons per sq. in.

Brass.—*Common brass*, mixture of 70 per cent *copper*, 30 per cent *zinc*. *Naval brass*, 62 per cent *copper*, 37 *zinc*, 1 *tin*; tensile strength 20 tons per sq. in.

After iron, the metals most commonly used in the construction of machinery, etc., are copper, tin, zinc, and their mixtures in various proportions, called alloys.

Copper.—This metal is red in colour and very soft, malleable and ductile when cold. It cannot be easily welded and does not make good castings. It is used principally for making steam and other pipes. To form a pipe, sheet copper is cut off the required length and π times the required diameter. The edges

Digitized by Google

are then hammered out, and the sheet is formed into a tube by bending rollers, the edges being brazed together over a fire or electrically. To form bends in the pipe, the whole is filled with molten lead and the pipe is then bent to the templets provided for the necessary curves. The lead is melted out, the pipe cleaned, and the flanges required are fitted (see page 113).

Copper is too weak and soft to be used for most purposes, but it is the principal element used in forming the various alloys included under the terms gun metal and brass, which are so extensively used in various parts of machinery. On account of its being such a good conductor of heat, copper is often used for the fire boxes of locomotive boilers. It is a very good conductor of electricity, being very little inferior to silver, which is the best, and so is used for wires for electric light leads, and wherever a good conductor is necessary. It oxidises very slowly, and is used as a sheathing for steel-built ships, which foul rapidly in sea water, even though they be carefully painted below the water-line with anti-fouling compounds. The bottom of the ship is first cased with about four inches of wood, usually teak, and sheets of copper are then nailed over the wood. The copper oxidises very slowly, and when the oxide falls off, it takes the marine growths away also.

Tin is a white metal used to mix with copper, etc., to form gun metal, and in its pure state to coat iron, copper, etc., to prevent oxidation. The brass tubes of distilling apparatus are so covered to prevent ill effects from the poisonous salts of copper. The thin plates usually called tin are in reality sheets of very good iron coated with a layer of tin. Mixed with lead it forms a solder for uniting brass, copper, etc. It can be distinguished from metals similar to it in appearance by the peculiar creaking noise which it makes when being bent.

Zinc is a white metal used to mix with copper to form brass, etc., and in its pure state to coat iron that is exposed to the action of moisture, to prevent its corrosion or decay. This coating is performed by immersing the iron, after it has been

Digitized by Google

thoroughly cleaned by fire and dilute hydrochloric acid, in a bath of molten zinc. The iron becomes coated with a layer of zinc, which increases in thickness according to the length of time that the article is kept in the bath. Iron treated in this manner is called *galvanised iron.* This name is not now correct, but was originally so owing to the plating being done by electricity.

Zinc has been used as a sheathing for ships, but is not so suitable as copper.

Zinc is also useful for protection from galvanic action. If copper and iron be placed in metallic contact in salt water, a galvanic action is set up and the iron rapidly eaten away; but if zinc be placed in contact with the copper and iron, the zinc is attacked and the iron untouched. This property is taken advantage of for the preservation of the interiors of boilers, and of those parts of the outside of hulls of iron or steel ships in the neighbourhood of masses of gun metal, such as the screw propellers, etc., by fitting plates or strips of zinc in connection with the iron or steel; these plates can be easily replaced by new when eaten away and the iron or steel preserved.

Gun Metal or *Bronze.*—This alloy is considerably harder than copper, and offers much greater resistance to crushing, which makes it suitable for many parts of machinery. It is easily melted, and forms good, sound, and strong castings. The proportions of copper, tin, and zinc in gun metal vary to some extent with the nature of the article to be produced, the hardness and brittleness of the alloy increasing with the addition of tin. A good average mixture is 88 per cent copper, 2 per cent zinc, and 10 per cent tin (Fig. 3).

Gun metal is much used for bearing surfaces in machinery, as it is sufficiently hard and durable to prevent excessive wear, but less so than iron or steel, so that the bearing will wear instead of the *journal* (that is the part that revolves within the bearing), and it can be easily replaced when worn. The friction also between gun metal and iron is moderate and uniform, so that the bearings work smoothly.

Digitized by Google

COMPOSITION OF METALS

GRAPHICAL *AIDE MÉMOIRE* OF THE PROPORTIONS OF VARIOUS ALLOYS

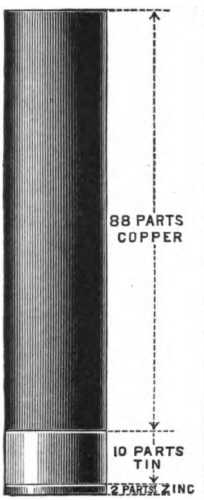

FIG. 3.
COMPOSITION OF GUN METAL.

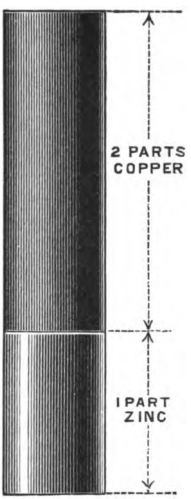

FIG. 4.
COMPOSITION OF BRASS.

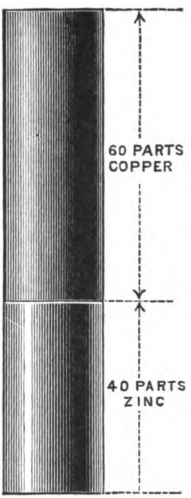

FIG. 5.
COMPOSITION OF MUNTZ METAL.

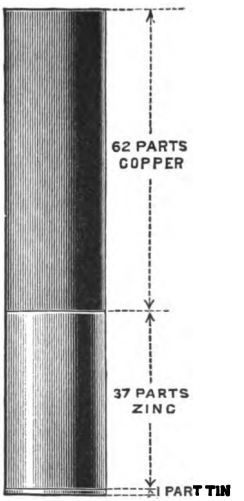

FIG. 6.
COMPOSITION OF NAVAL BRASS.

Digitized by Google

Digitized by Google

The ordinary gun metal used in machinery is much tougher than cast-iron, and is, therefore, more suitable for parts that are subject to shocks and jars. In consequence of its resistance to corrosion it is much used for pumps, valve boxes, and other parts exposed to the action of water, in preference to cast-iron, although its first cost is much greater. The tensile strength of gun metal is from about 12 to 15 tons per sq. in.

Phosphor bronze is made by the addition of a small quantity of *phosphorus* to gun metal; and *manganese bronze* is made by the addition of a small quantity of *manganese* to gun metal. Both these increase the tenacity and toughness of the metal, rolled phosphor bronze and manganese bronze having a tensile strength of 26 tons per square in. Phosphor bronze for castings, such as stem and stern posts of sheathed ships, is composed of 85 parts copper, 8 of tin, and 7 of copper phosphide.

Brass.—Ordinary brass, which is used for castings where strength is not important, is an alloy composed of about 2 parts of copper to 1 of zinc (Fig. 4); it is yellower in colour and much softer than gun metal. As zinc costs much less than tin, brass castings are cheaper than those of gun metal, but are not so strong or suitable for engine castings.

Muntz Metal.—This description of brass is composed of 60 per cent copper and 40 per cent zinc (Fig. 5). It can be rolled hot into bars, plates, and sheets, and has been largely used for making rods, bolts, etc., as it possesses considerable tenacity. It has, however, been found that if Muntz metal bolts are in contact with gun metal or copper in sea water, galvanic action ensues, which speedily decomposes the Muntz metal, the zinc in the compound being destroyed.

Naval Brass.—This action appears to be to a great extent prevented by the addition of a little tin to the metal. An alloy composed of 62 parts copper, 37 zinc, and 1 tin (Fig. 6), which for distinction is known by the name of naval brass, is used instead of Muntz metal for all such fittings.

Digitized by Google

LESSON IV

RIVETED JOINTS

Rivets.—Forms of rivet heads and points in ordinary use, *pan*-shaped heads, *countersunk*, *conical* and *snap* pointed rivets. *Rivet holes* drilled or punched, holes in two plates brought exactly in line. Riveting done by hand work or machine, machine work best. Rivets used *red hot*, on cooling *contract* and hold plates very firmly. *Screw rivet*. *Single* or *double* rows of rivets used.

Lap Joints used for edges of plates; sketch of section of *lap joint* showing either form of rivet.

Butt Joint with *butt strap* for connecting ends of plates, sketch of section of *butt joint* showing either form of rivet; *double butt straps* used for boiler joints, and three rows of rivets.

Joint of two plates not in one plane by *angle iron* (or steel) joint, or by flanged joint. Sketch sections of both.

Proportion of strength of *single* and *double riveted lap* joint to that of *solid plate* 56 and 70 per cent respectively.

Riveted Joints.—The iron or steel plates forming the hulls of ships and used in the construction of boilers are usually fastened together by rivets, great care being taken in the design and workmanship that each joint may have as great a proportion of strength to the solid plates as possible.

A *rivet* is virtually a bolt, with the head, body, and nut in one piece. It is a permanent fastening, only removable by chipping off the head or drilling out. Rivets are almost always placed at right angles to the straining force, so as to be in *shear*. When the straining force is parallel to the axis, bolts and not rivets are generally used.

Digitized by Google

Digitized by Google

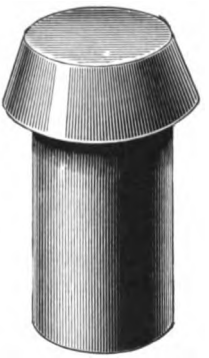

FIG. 7.—FORM OF RIVET BEFORE USE.

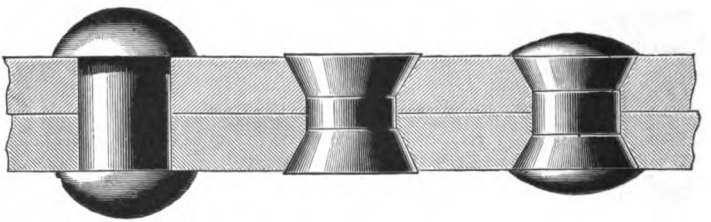

FIG. 8.—RIVETS WITH MACHINE-MADE HEADS.

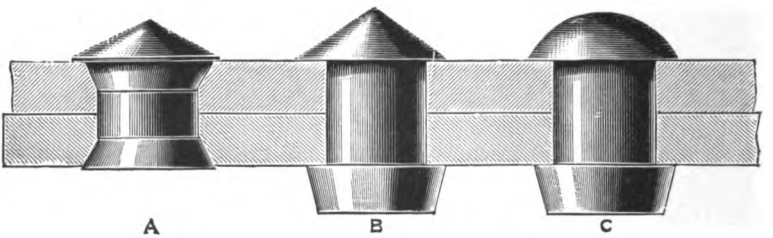

FIG. 9.—RIVETS WITH HAND-MADE HEADS.

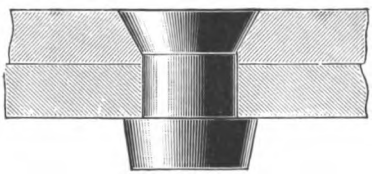

FIG. 10.—COUNTERSUNK HEAD RIVET.

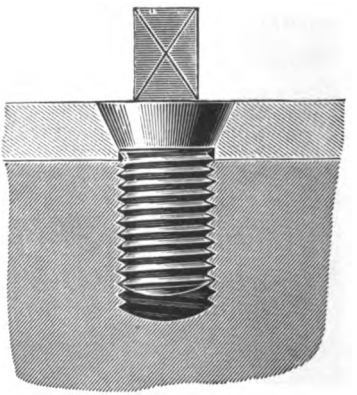

FIG. 11.—SCREW RIVET.

Digitized by Google

A rivet is formed of round iron or mild-steel bar, and when ready for use has the form shown in Fig. 7. Its body or shank is usually cylindrical. The head is generally *pan*-shaped as shown. Rivets are made of soft wrought iron or steel in special rivet-making machines, being pressed while red hot to the required form in suitable dies or stamps.

Rivet holes are in some cases made by *punching*, but this is a very rough method, and tends to injure the plates in the vicinity of the hole. In all good boiler work rivet holes are always *drilled*, and great care is taken that the holes in the plates to be riveted together exactly correspond. If possible, all holes are drilled in the two plates at the same time, the plates being afterwards separated and the rough edges of the holes trimmed.

When used, the rivets are made red hot, placed in the rivet holes in the plates to be connected, with a sufficient length projecting, and then the second head or point is formed by hand or by machine work.

In hand riveting, the red-hot rivet being put into the rivet hole, the first head of the rivet is held up in place by means of a heavy weight placed against it, while the second head is formed by two riveters working with hammers; it is either made conical by the hammers alone, or finished by the aid of a steel tool having a cup-shaped end, called a *snap*. This is placed over the roughly formed point of the rivet and hammered, and gives it a smooth and finished appearance.

In machine riveting, which is always used when practicable, owing to the work being done better and more quickly, the rivet is pressed between two dies actuated by a lever, or by steam or hydraulic pressure; the last-named plan is usually adopted.

Rivets of the size for ships and boiler work are always put in red hot, as they are more easily worked in this state than when cold; also when heated they expand, and as they cool contract, and tend to nip the plates together and make the joint tighter.

Digitized by Google

For thin plates, cold rivets of very soft steel are used.

Fig. 8 gives the form of heads used in machine riveting.

Fig. 9 gives the form of heads used in hand riveting—(A) and (B) are finished entirely by hand. (C) is finished off with a "snap."

Fig. 10 gives the form of head where the outside surface requires to be fair, such as the outside plating of a ship. In this case the hole in the outer plate is *countersunk*, or made conical by means of a drill, the rivet is hammered to fill the countersink, and cut off *flush* with the plate.

Fig. 11 gives a form of rivet used where the receiving piece is too thick to admit of an ordinary rivet being used. The square head used for screwing the rivet in is afterwards cut off. Rudder plating is secured to the rudder framework by rivets such as these.

When one plate is made to overlap the other, and one or more lines of rivets put through the two, the riveting is called *lap* riveting, as shown in Fig. 12.

When the plates are kept in the same plane, with their ends or *butts* put together and a *cover plate* or *butt strap* fitted over the joint and riveted to each, the riveting is called "butt" riveting, as shown in Fig. 13.

If there is one line of rivets in *lap* riveting, or one line on each side of the joint in *butt* riveting, the joint is *single riveted.* If there are two lines in lap, or two lines on each side of the joint in butt riveting, the joint is *double riveted.* If three, *treble riveted*, and so on.

Double butt straps and treble riveted joints are used for the longitudinal seams of boilers, as shown in Fig. 14.

Two plates not in one plane are joined in two ways :—

First, by an angle iron, or angle steel, as shown in Fig. 15, which is called an *angle-iron joint.*

Second, by flanging one of the plates, that is bending the edge over for a certain distance, as shown in Fig. 16, which is called a *flange joint.*

Digitized by Google

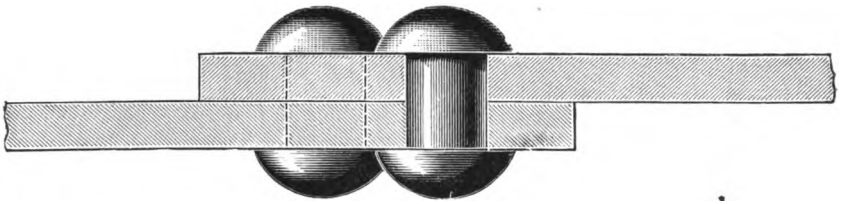

Sectional Elevation.

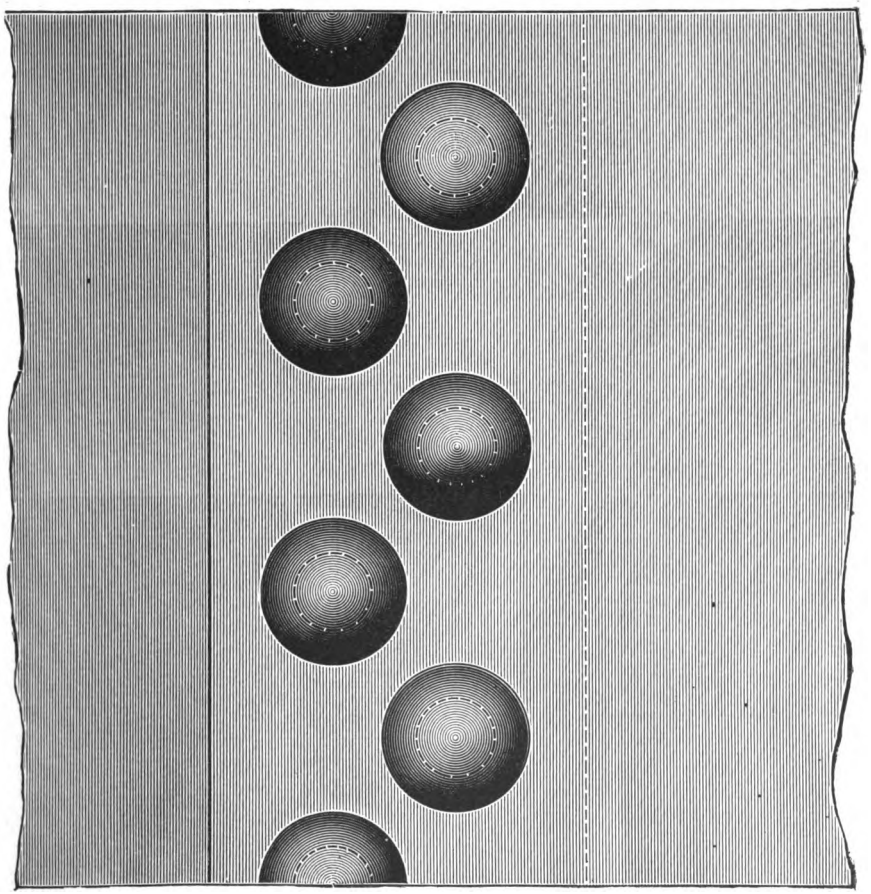

Plan.

Fig. 12.—Double Riveted Lap Joint

Digitized by Google

Digitized by Google

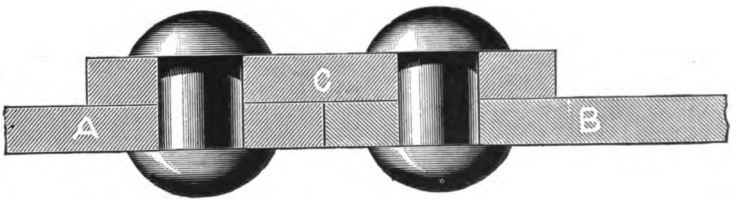

SECTIONAL ELEVATION.

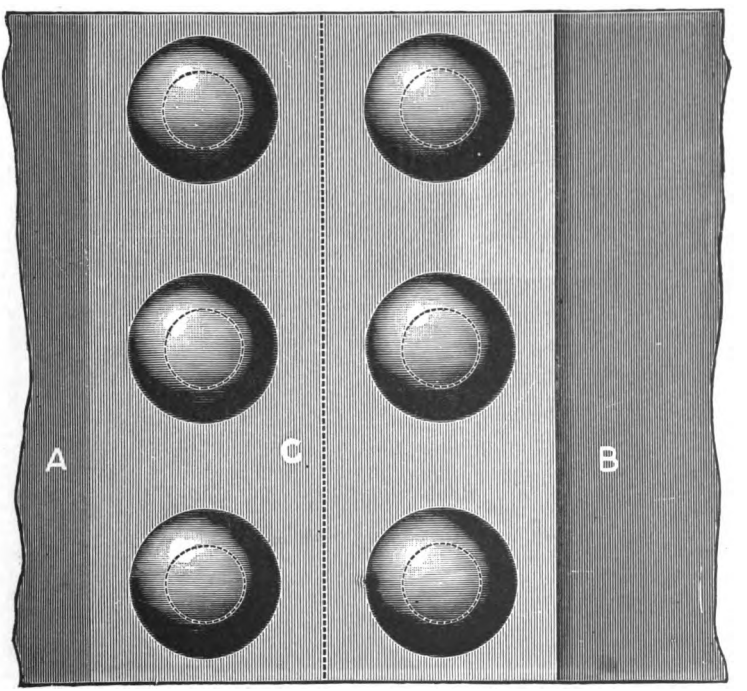

PLAN.

FIG. 13.—SINGLE RIVETED SINGLE BUTT STRAP JOINT. (Page 30.)

Plates A *and* B *butted together and secured by a strap* C.

Digitized by Google

Digitized by Google

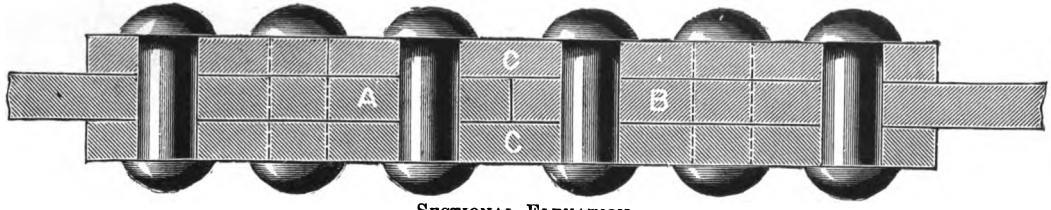

SECTIONAL ELEVATION.

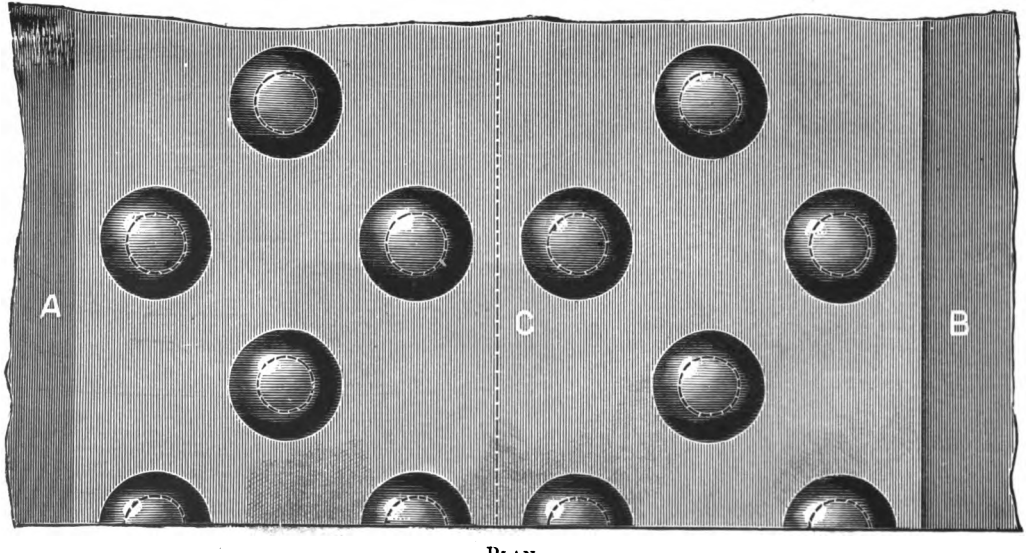

PLAN.

FIG. 14.—DOUBLE BUTT STRAP TREBLE RIVETED JOINT. (Page 30.)

Plates A *and* B *butted together and secured by straps* C C.

Digitized by Google

Digitized by Google

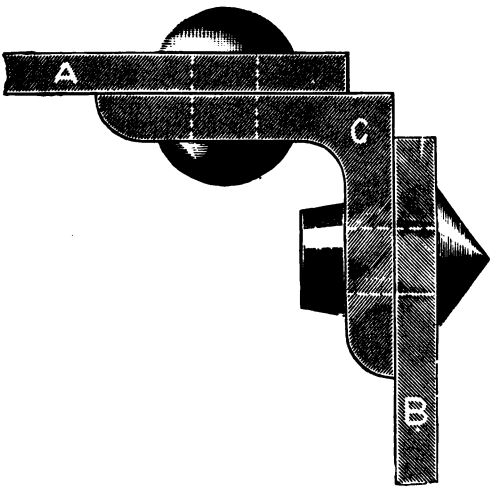

FIG. 15.—ANGLE-IRON JOINT. (Page 30.)

Plate A *secured to plate* B *by angle iron* C.

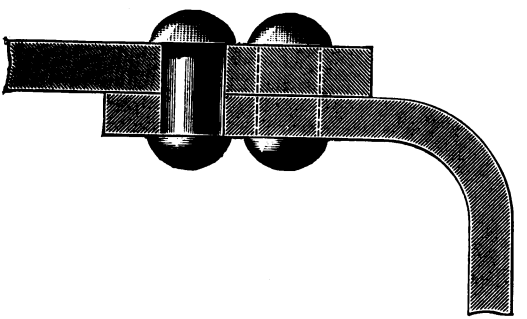

FIG. 16.—FLANGE JOINT. (Page 30.)

Digitized by Google

Digitized by Google

The flange joint is a better form of fastening, as will be seen later when considering boiler work. Thus the fronts and backs of the boiler are secured to the shell plates by being flanged; the only rivets used are subjected to a shearing force which they are well able to withstand. There is also only one line at which leakage might occur instead of two as in the angle-iron joint. The flange joint is always used in boiler construction; the other is generally used in shipbuilding.

Proportion of Strength of Joint to that of Plate.—The following may be taken as the approximate relative strength of various riveted joints: Single riveted lap joint, 56 per cent; double riveted lap joint, 70 per cent; treble riveted double butt strap joint, 80 per cent.

The pitch, that is the distance from the centre of one rivet to the centre of the next, must never be less than twice the diameter of the rivet; and the distance from the edge of the rivet hole to the edge of the plate must never be less than the diameter.

Diameters of rivets for different thicknesses of plate:—

Where t = Thickness of plate.
d = Diameter of rivet.

t in 16ths of an inch.	d in 16ths of an inch.	t in 16ths of an inch.	d in 16ths of an inch.
5	8	11	14
6	10	12	16
7	12	13	16
8	12	14	18
9	14	15	18
10	14	16	18

Digitized by Google

LESSON V

SCREW THREADS AND FASTENINGS

Formation of screw thread. Kinds of threads used: V thread, *square* thread, *rounded* and *buttress* threads. Screw threads formed on cylindrical surfaces by screw-cutting *lathe*, by *dies* and *taps*. *Bolt* and *nut*. *Pitch* of screw thread. To distinguish *right* and *left handed* threads. Sketches of V and square threaded screws showing thread *right* or *left* handed. *Single-*, double-, etc., threaded screws. Pitch estimated by number of threads to the inch for ordinary fastenings. "Whitworth" or common threads; fine or gas threads. *Bolt heads* and *nuts* made hexagonal, turned by *spanners*. Use of *studs*. Methods used to prevent a nut screwed up from slacking back, *lock nuts*, *guards*, and *set screws*.

Formation of a Screw Thread.—Suppose a line AB (Fig. 17) perpendicular to AA′ to move uniformly along AA′ and at the same time to revolve uniformly around it. It is clear that the extremity B of the arm AB will travel on the surface of a cylinder and will trace out a spiral curve on that cylinder. The same will be true of any and every point in the line AB, and the surface swept out or developed by AB will be a *spiral* or *screw* surface.

If the line AB made a complete revolution round AA′, the distance of A′ from A at the end of the revolution would be the *pitch* of the screw. It is obviously equal to the distance between two consecutive turns measured in the direction of the axis.

A *screw* may be defined as a cylindrical bar on which has been formed a helical projection or *thread*. If the screw fits accurately into a hollow corresponding form, the latter is termed its *nut*.

Digitized by Google

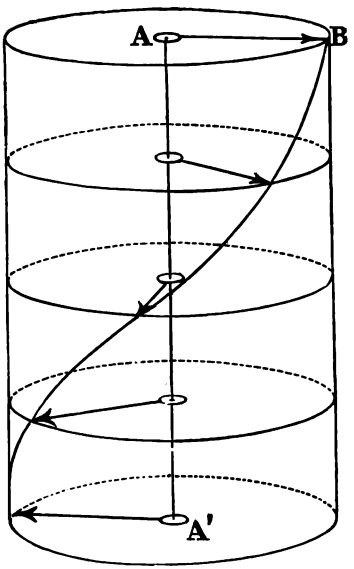

FIG. 17.—FORMATION OF A SCREW THREAD. (Page 40.)

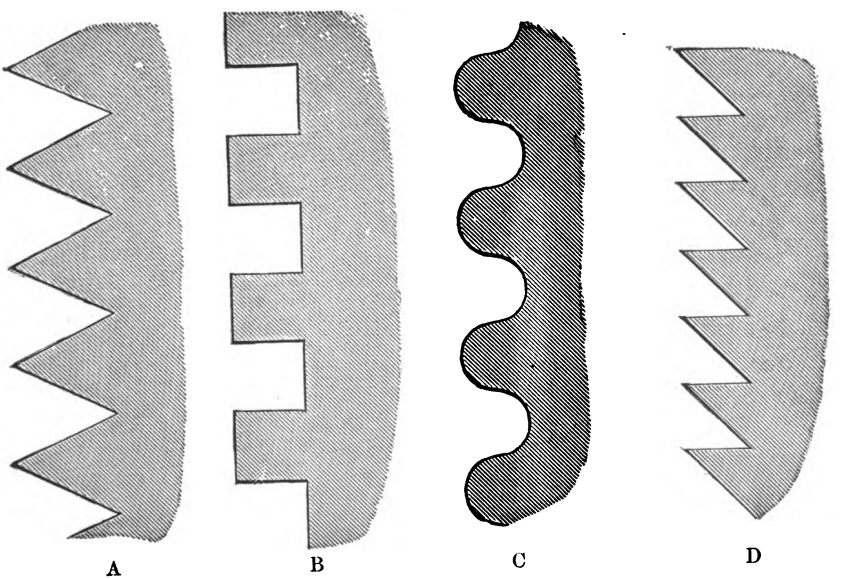

FIG. 18.—SHAPE OF DIFFERENT THREADS. (Page 43.)

Digitized by Google

Digitized by Google

The shape of the different threads used is shown in Fig 18 :

(A) is a V-shaped triangular thread; the points are generally rounded off to render them less liable to injury.
(B) is a square thread, generally used to transmit motion.
(C) is a modified square, or rounded thread fitted where the screw is liable to rough usage.
(D) is a buttress thread, used in special cases when the straining action comes on one side of the thread only; the flat side of the thread is arranged to take the pressure.

These threads when of large size, or if great accuracy is required, are cut in a cylindrical bar or in a nut, in a *screw-cutting lathe;* for ordinary fastenings by means of *stocks* and *dies.* These are tools made with cutting edges, stocks for cutting threads in bolts, etc., and taps for making the threads in nuts.

Bolts and *nuts* are much used for fastenings of machinery; they possess the advantage over rivets, that they can be removed and replaced as often as necessary.

A *bolt* is a cylindrical bar with a thread cut on it, and a solid head at one end. The *nut* works on the thread (Fig. 19).

The nut and bolt head are usually made *hexagonal* in form to enable them to be worked by *spanners.* A spanner is a flat bar of iron or steel, with jaws at the end which fit the nut and bolt head.

Pitch of Thread.—The *pitch* of a screw thread is *the distance between the centres of two consecutive threads measured in the direction of the axis.*

The pitch of the threads of screw fastenings is usually estimated by the number of threads to the inch. For instance, an ordinary bolt of 1 inch diameter has usually 8 threads for every inch of its length; the pitch of these threads would therefore be $\frac{1}{8}$th of an inch. The pitch becomes greater as the bolts increase in diameter.

Threads are usually formed for a *right-handed* motion, but occasionally *left-handed* threads are used. A right-handed thread may be distinguished in the following way, taking a nut and bolt for example: if, on turning the bolt in the direction in

Digitized by Google

which the hands of a watch revolve, it enters the nut, the thread is right-handed. If it enters by turning in the opposite direction, it is left-handed. (Short lengths of right and left handed square threads are shown in Figs. 20 and 21.) In a *single-threaded screw*, if one thread be traced round, the next thread will be reached in one revolution. If, however, in tracing the thread round, one thread is missed, it would be a *double-threaded screw*, that is, there would be two distinct and separate threads on the same bar; if two, a three-threaded screw, and so on.

Whitworth Thread.—It is important for purposes of interchangeability that one common form and pitch of screw thread should be generally used for bolts of the same diameter.

Sir Joseph Whitworth was the first to propose and arrange a standard system of threads for screw bolts, etc., called after him the Whitworth thread. This method is generally adopted in England and the Colonies for all the more important screw fastenings of machinery.

The Whitworth thread is triangular in section, the angle of the point of the thread being 55°. One-sixth of the depth of the thread is rounded off at the top and bottom. The pitch "p" depends on the diameter of the bolt. Two parallel lines are drawn ·96 of "p" apart; these are intersected by lines equally inclined to them, and including an angle of 55°. Lastly $\frac{1}{6}$th of the depth of the triangular spaces so obtained is rounded off both at the top and at the bottom (Fig. 22), to avoid injury.

The pitch of the smaller sizes of V threads is given by the table:

Diameter	$\frac{1}{4}''$	$\frac{3}{8}''$	$\frac{1}{2}''$	$\frac{5}{8}''$	$\frac{3}{4}''$	$\frac{7}{8}''$	$1''$
Pitch	20	16	12	11	10	9	8

For square threads half this number of threads to the inch is used, or any number suitable to the work designed.

In wrought-iron tubes used for conveying gas, etc., the Whitworth thread is not suitable. For these a special system of threads has been adopted, finer in pitch and cutting less deeply into the

Digitized by Google

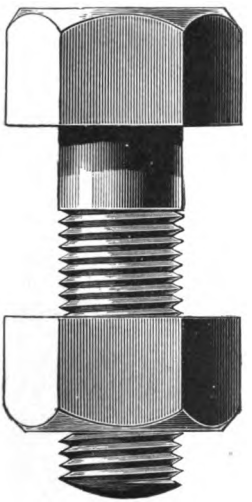

FIG. 19.
BOLT AND NUT.
(Page 43.)

FIG. 20.
SHORT LENGTH OF
RIGHT-HANDED
SQUARE THREAD.
(Page 44.)

FIG. 21.
SHORT LENGTH OF
LEFT-HANDED
SQUARE THREAD.
(Page 44.)

Digitized by Google

Digitized by Google

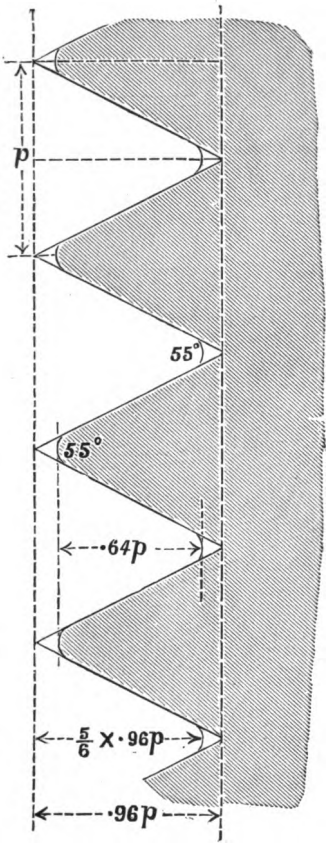

FIG. 22.—CONSTRUCTION OF WHITWORTH THREAD.
(Page 44.)

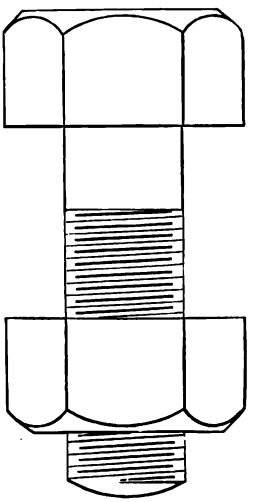

FIG. 23.—METHOD OF SHOWING ROUGH SKETCH OF SCREW THREAD.
(Page 55.)

Digitized by Google

Digitized by Google

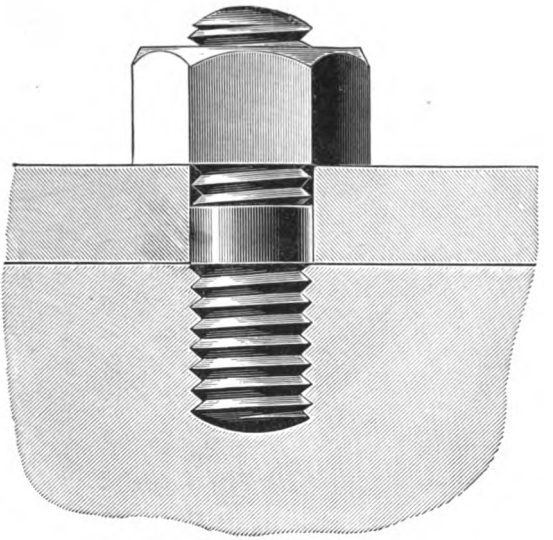

FIG. 24.—STUD AND NUT. (Page 55.)

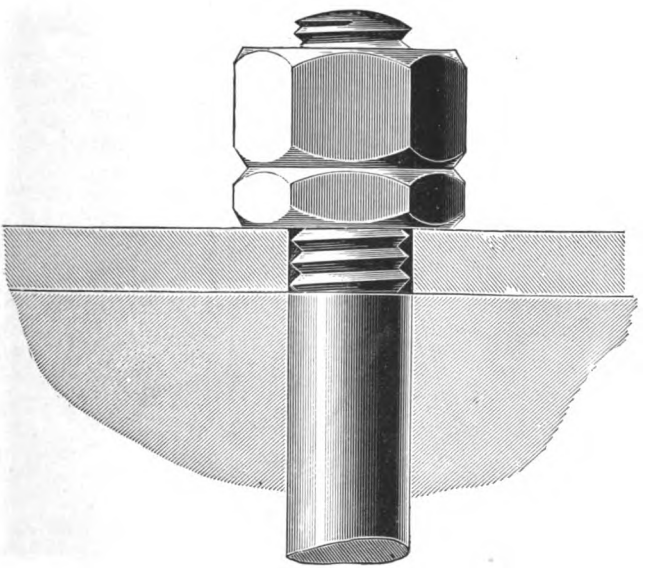

FIG. 25.—DOUBLE LOCK NUTS. (Page 55.)

Digitized by Google

Digitized by Google

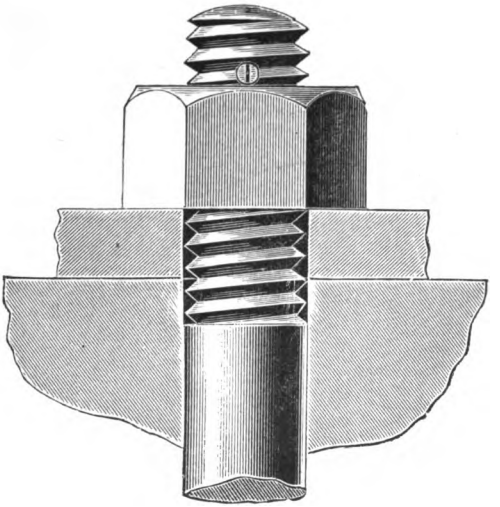

SECTIONAL ELEVATION.

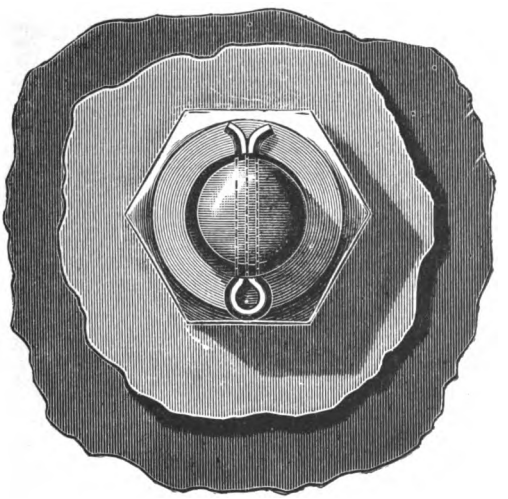

PLAN.

FIG. 26.—NUT SECURED BY SPLIT PIN. (Page 55.)

Digitized by Google

Digitized by Google

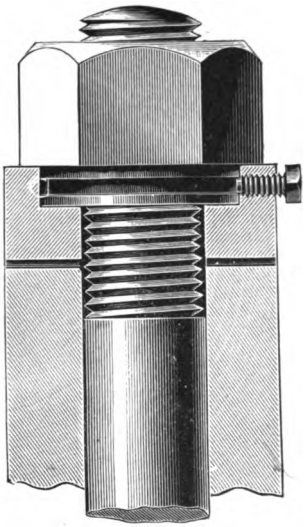

FIG. 27.—NUT HELD BY SET SCREW. (Page 55.)

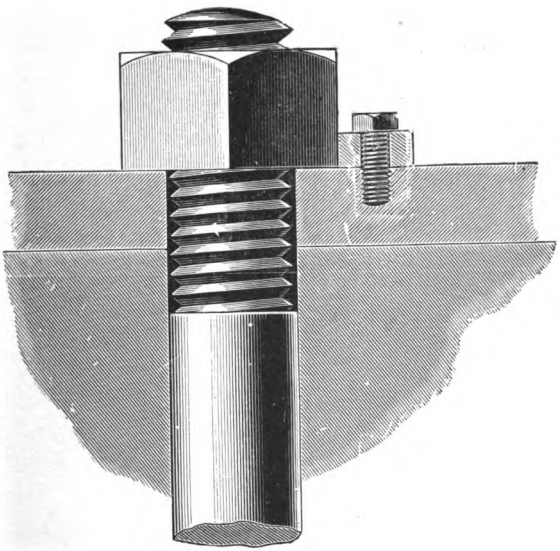

FIG. 28.—NUT HELD BY GUARD. (Page 55.)

Digitized by Google

Digitized by Google

metal than the Whitworth thread would do. These are called *gas* or *fine* threads.

In *rough* sketches of screws, faint and dark lines are used alternately, as in Fig. 23.

Studs.—For fastenings where it would be inconvenient or impossible to use bolts on account of their solid heads, *studs* are used, as shown in Fig. 24. One end of the stud is screwed into the solid metal and the piece to be fastened to the metal is passed over the stud and secured by a nut to it.

Nuts used for ordinary fastenings when screwed up tightly, will as a rule remain so, but nuts subject to vibration are liable to slack back, and special *locking* arrangements have to be made to prevent this.

One way of doing this is to have *double* nuts. One of the nuts is termed a *lock* nut and is usually half as thick as the ordinary nut. When the nuts are screwed home they are locked together by being turned by *spanners* in opposite directions, and one tends to keep the other firm (Fig. 25). This method is adopted for small sized nuts, for large sizes the method would be heavy and cumbersome.

Another way is to drill a hole through the top of the bolt or stud and drive a *split pin* or a *cotter* through. The disadvantage of this method is that the nut must always be in the same place, that is, close to the pin, when screwed up (Fig. 26).

A method much used for large sized nuts, which have to be screwed up slightly from time to time, such as the nuts of main engine bearings, is to turn the lower part of the nut circular and fit it into a recess in the piece to be connected. A *set screw* is screwed through the fixed part and bears on the side of the circular part of the nut (Fig. 27).

A different method is adopted for large sized nuts, which are seldom moved, such as the piston rod nuts of engines. In this case a *guard* is fitted against one of the hexagonal sides or corners of the nut, the guard being secured to the metal by one or more screws (Fig. 28).

Digitized by Google

MECHANISM

LESSON VI

TRANSMISSION OF POWER BY SHAFTS, ETC.

Shafts, Bearings, etc.—Cylindrical shafts of wrought-iron or mild steel used for transmission of power. Shafts are subjected principally to *twisting* forces. Strength of solid shafts to resist twisting, proportional to diameter^3. Advantage of using *hollow* shafts. Two shafts joined by *flange coupling* (sketch). Universal joint. Method of securing centres or bosses of wheels, etc., to shafts by *sunk* keys. Disconnecting gear and clutches.

Bearings.—Supports of shafts called *bearings.* Sketch of ordinary pedestal bearing; parts of shafts resting in bearings called *journals*, use of *liners.* Use of wood bearings, description of bearing for stern shaft of ship lined with *lignum vitæ.*

Joints of working rods.—Knuckle joint, use of *bushes:* marine engine *connecting rod* showing *brasses*, etc., for crank pin bearing.

Shafts used for the transmission of power are generally cylindrical in shape, and are made of wrought-iron, or mild steel cast and forged.

The principal force to which a shaft of this sort is subjected is *twisting.* For instance, in the propeller shafting of a ship the engines move the shaft in one direction; the propeller is turned through the water which resists it, and a twisting force is thus set up in the shaft.

The strength of shafts to resist twisting is proportional to their diameter cubed: thus shafts of 1, 2, 3 inches diameter would have strength to resist twisting in the proportion of

Digitized by Google

Digitized by Google

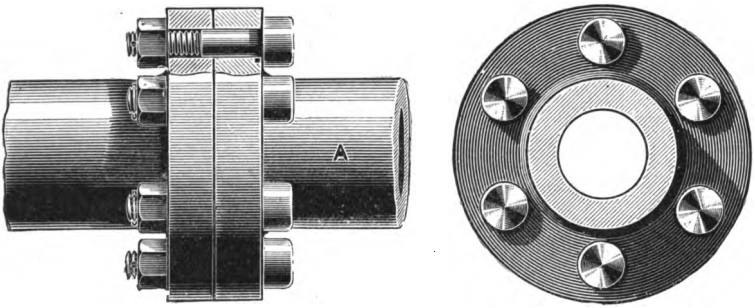

SECTIONAL ELEVATION. END ELEVATION.

FIG. 29.—FLANGE COUPLING. (Page 61.)

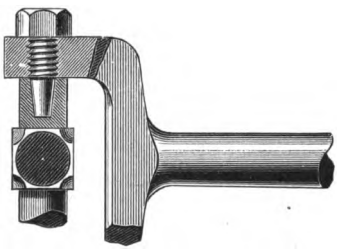

PART SECTION THROUGH CROSS PIECE.

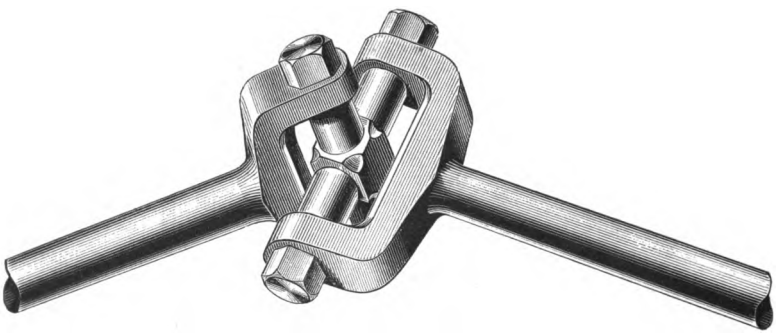

PERSPECTIVE VIEW.

FIG. 30.—UNIVERSAL OR HOOKE'S JOINT. (Page 61.)

Digitized by Google

Digitized by Google

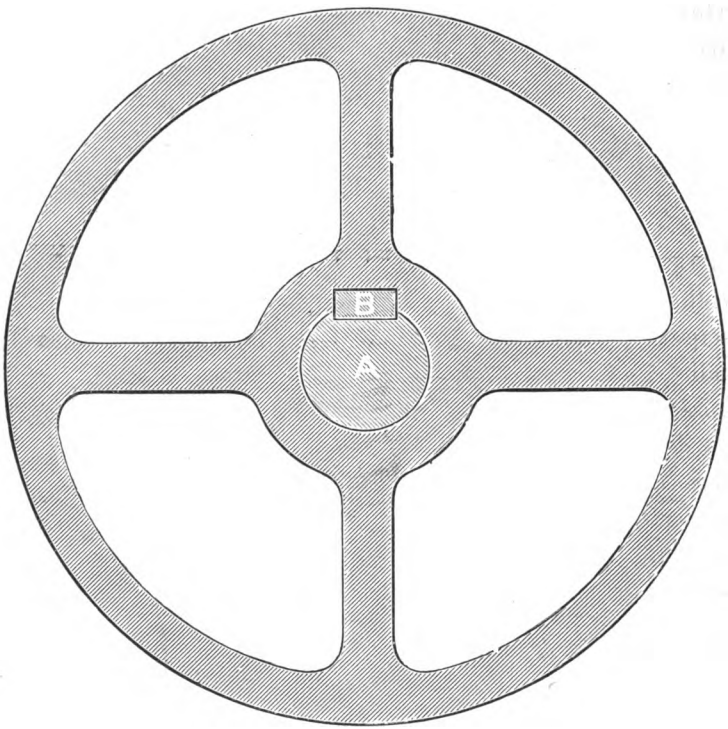

Fig. 31.—Section showing Boss of Wheel secured to Shaft by Sunk Key.

Digitized by Google

1 : 8 : 27, so that the strength is materially increased by comparatively slight additions to the diameter.

By using *hollow shafting* a stronger shaft can be made for the same weight of material, for example, a 12 inch shaft, with a 6 inch hole through its centre, is only 6 per cent weaker, while it is 25 per cent lighter than a solid shaft of the same diameter. The main engine shafting now used in H.M. Ships is always made hollow for this reason.

These shafts are made in convenient lengths and fastened together by *flange couplings* usually forged solid on the shaft (Fig. 29), but sometimes made separate and keyed on. The flanges and the bolts connecting them are so designed as to be of the same strength to resist twisting as the shafting. The bolts are in some cases prevented from turning when being screwed up by small projecting pieces fitted under their heads called *stops*, which are held in small recesses made for them: a stop is shown in top bolt in sectional elevation.

Universal or Hooke's Joint.—The flange coupling just described is used for connecting straight lengths of shafting; but it is often convenient with light shafting to incline one part to the other, as in the connections between the deck steering wheel and steering engine of a ship, or between the deck and engine-room telegraphs. In order that one part of this shafting may drive or be driven by the other, the *universal joint*, as shown in Fig. 30, is employed at the angle where they meet. In this arrangement the two lengths of shafting are fitted with forked ends, which are connected to a cross piece at right angles to each other by pins on which they can work freely.

Keys.—The *centres* or *bosses* of wheels, etc., are secured to their axles or shafts by means of *keys*, made of steel, usually sunk or recessed into the shaft, and so called *sunk keys* (Fig. 31). A longitudinal groove or *keyway* is cut in the shaft A and a corresponding groove in the wheel, and a *key* B which is made slightly taper is driven in, thus holding the axle and wheel together. When the wheel can move along the shaft,

Digitized by Google

but not round it, this key is called a *feather*. In this case it must be secured on the shaft, and its faces must be parallel to the axis of the shaft.

Disconnecting Gear and Clutches.—It is often necessary to disconnect two shafts, so that one can revolve without the other. This can be done either by taking out the bolts of a coupling, which are often fitted so as to be easily withdrawn, or by means of *clutches*. A common form of this fitting is the *jaw clutch*, which may be thus described: the coupling at the end of one shaft is rigidly fixed to it, and is fitted with *jaws* or projections which fit into corresponding recesses formed in the coupling at the end of the other shaft, so that if the couplings are brought together one cannot turn without turning the other. The coupling on the second shaft is fitted so that it can slide along on a feather; now if this coupling be slid along so that the projections fit into the recesses, one shaft will drive the other, but if it be withdrawn, one shaft can revolve without the other. The machinery would, as a rule, have to be stopped while this clutch coupling was being put in or out of gear. The Weston's friction clutch, described on p. 102, can be connected or disconnected with the machinery in motion.

BEARINGS.—The supports of a shaft and the part in which it revolves are called *bearings*. The part of the shaft revolving in the bearing is called a *journal*.

Pedestal Bearing or Plummer Block.—One of the most common forms of bearings is shown in Fig. 32. A is the journal of the revolving shaft. B is the base of the bearing screwed down to a part adapted to receive it. C is the cap or upper half of the bearing secured to the lower half by bolts and nuts D D. E E are semicircular gun metal rings in which the journal revolves, called *brasses*. These are usually filled to a depth of about half an inch with *white metal*. This is an alloy of tin, antimony, lead, etc., which rapidly wears to a hard smooth surface. F F are brass or wood *liners* fitted so as to be capable of being easily reduced in thickness. When the bearing begins to get

Digitized by Google

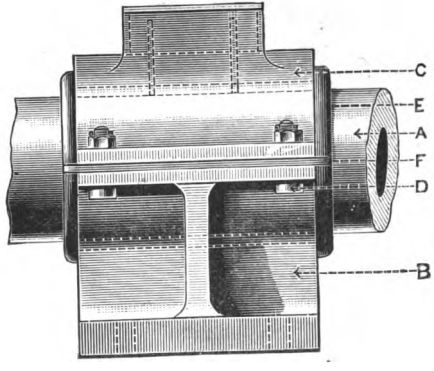

SIDE ELEVATION.

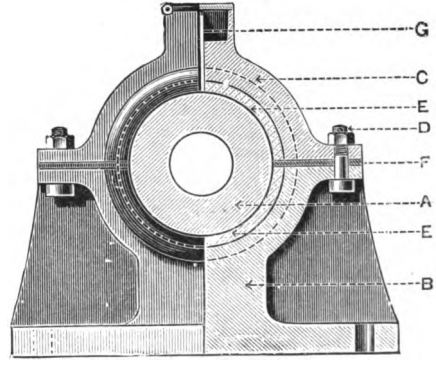

END ELEVATION.

FIG. 32.—PEDESTAL BEARING OR PLUMMER BLOCK.

Digitized by Google

Digitized by Google

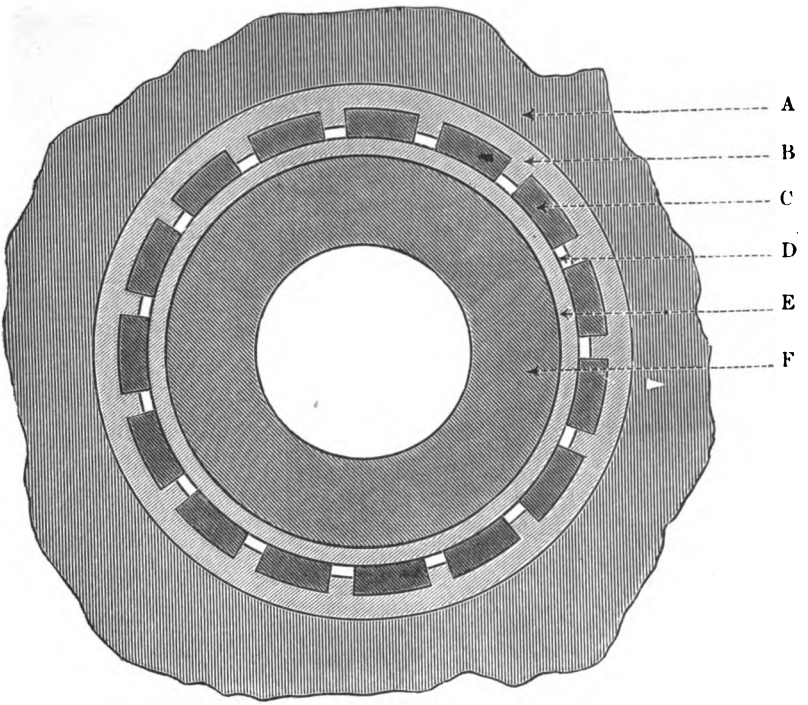

FIG. 33.—CROSS SECTION OF SHAFT IN LIGNUM VITÆ BEARING.
(Page 69.)

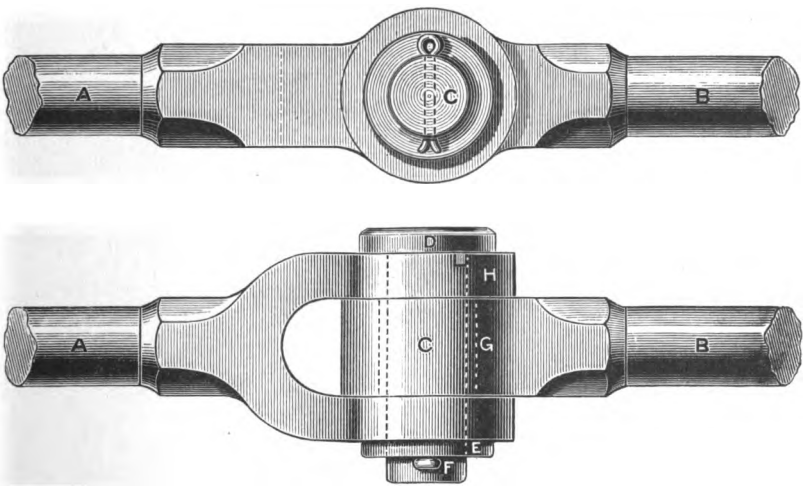

FIG. 34.—KNUCKLE JOINT. (Page 69.)

Digitized by Google

Digitized by Google

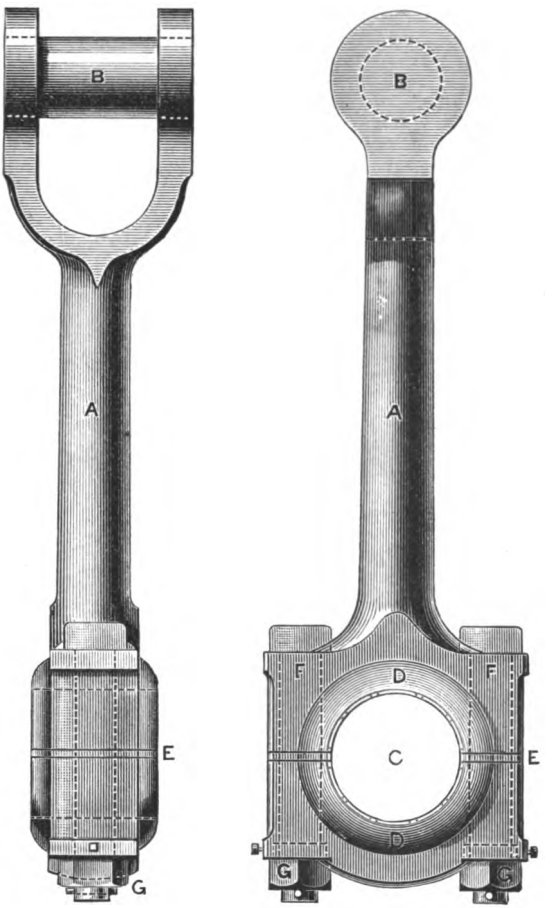

FIG. 35.—CONNECTING ROD. (Page 70.)

Digitized by Google

Digitized by Google

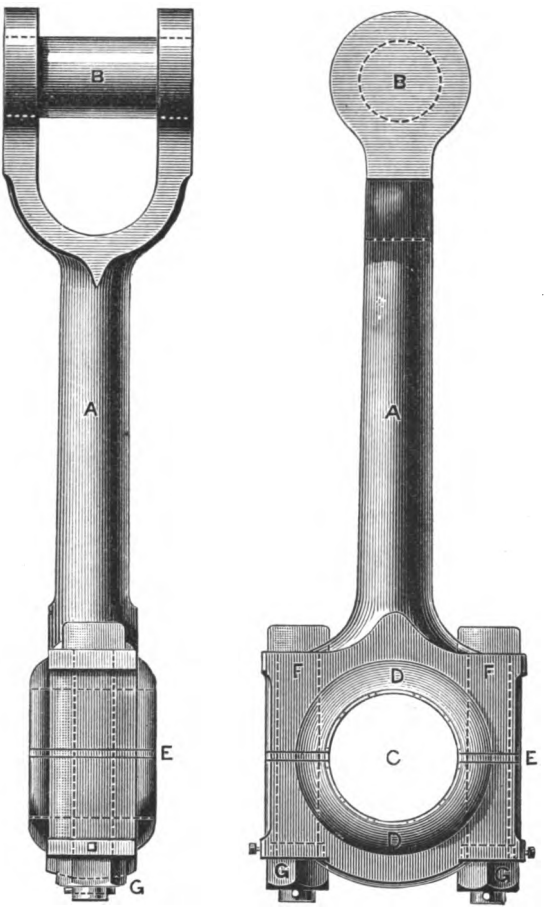

FIG. 35.—CONNECTING ROD. (Page 70.)

Digitized by Google

Digitized by Google

too loose for the journal, C is taken off and F F are thinned down the requisite amount. C is then put on again and bolted tightly down. G is an *oilway* from the top of the bearing to the journal.

Lignum Vitæ Bearings.—Ordinary bearings are not suitable for use under water, as the brasses have been found to wear away very rapidly, and for this purpose bearings lined with *lignum vitæ* (a very hard wood) are used. The after length of the screw shaft of a ship may be taken as an example. This is cased in gun metal to prevent oxidation, and supported in the gun metal stern tube and outer bearings, on strips of *lignum vitæ*, which are *dovetailed* into the bearing with water spaces between them (Fig. 33). A is the steel framework of the ship, B is the gun metal stern tube, C is a lignum vitæ strip, D is a water space, E is the gun metal casing fixed on to the hollow steel shaft F. These lignum vitæ strips form a very good bearing, and they can be very easily renewed when worn.

JOINTS OF WORKING RODS.—Motion has often to be conveyed from one part of a machine or engine to another by rods having working joints at their ends. These may be illustrated by the *knuckle joint* as shown in Fig. 34, and by the *connecting rod* of a marine engine shown in Fig. 35.

Knuckle Joint.—Referring to Fig. 34, the end of the rod A is connected to the end of B by the working joint as shown; the end of A is forked and is fitted with a *pin* C having a head D at one end with a stop H to prevent its working round, and a *washer* E and *split pin* F at the other to keep it in place.

The end of B is enlarged and has an eye formed in it which is fitted with a gun metal lining or *bush* G bored to fit the pin which works in it: an oil hole is provided for lubrication. The whole joint is designed so that all its parts are of equal strength; the pin is usually made the same diameter as the rods it connects.

An objection to bushes for these joints is that when they wear they must be replaced by new, since they cannot be closed

Digitized by Google

on the pin as the brasses of an ordinary bearing can be; so that in connections of large size, or if there is likely to be much wear in a joint, it is usual to fit it with brasses instead, which may be adjusted as necessary as wear goes on; these are held in place by a cap and bolts, much like an ordinary bearing.

Connecting Rod.—A common form of connecting rod as fitted to marine engines for transferring the motion of the piston rod to the crank, p. 73, is shown in Fig. 35. The pin B, called the *crosshead pin*, which is firmly secured in the top end of the connecting rod A, works between *brasses* at the bottom end of the piston rod, which are capable of adjustment. The bottom end C of the connecting rod is fitted with *brasses* D lined with white metal, in which the crank pin works; the brasses are held together by the cap, bolts F and nuts G as shown, and may be closed on the pin as necessary by making the liners E thinner.

Digitized by Google

Digitized by Google

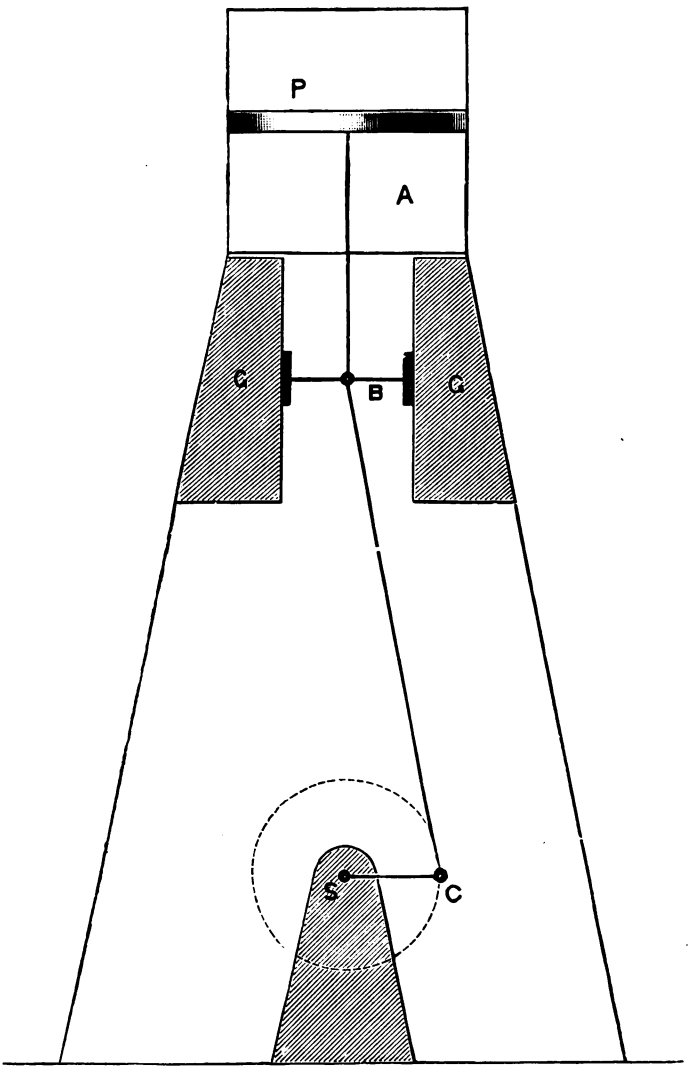

FIG. 36.—OUTLINE SKETCH ILLUSTRATING CONVERSION OF MOTION BY MEANS OF CONNECTING ROD AND CRANK.

Digitized by Google

LESSON VII

CONVERSION OF MOTION

Explanation of method of converting *reciprocating* into *rotatory* motion, illustrated by crank and connecting rod of steam engine, with outline sketch. Meaning of *dead points*; fly-wheel used with single cylinder engines; two engines with their cranks at right angles, or three engines with cranks at 120°, used in ships. Crank shaft (sketch).

Explanation of conversion of *rotatory* into *reciprocating* motion by means of *eccentric*, *eccentric strap*, and *rod* (sketch).

Irregular reciprocating motion obtained from rotatory motion by use of *cams*.

CONVERSION OF MOTION.—The two principal kinds of motion in parts of machines and engines which we have to consider are *revolving* or *rotatory* and *to and from* or *reciprocating*. It is often necessary to convert one into the other. In the steam engine the reciprocating motion of the piston is converted into the rotatory motion of the shafting and propeller by means of the *connecting rod* and *crank*.

A *crank* may be defined as a lever which is caused to move about a centre at one end by a force applied at the other. Referring to Fig. 36, the rotating shaft S, which is carried in suitable bearings, has on it a crank or arm S C connected to the *piston rod* by the *connecting rod* C B, which has a working joint at each end. The end B of the piston rod is constrained to move in a straight line by the action of suitable *guides* G G. During the downstroke of the piston the connecting rod *pushes* the crank through half a revolution, and during the upstroke

Digitized by Google

pulls it through the other half. The reciprocating motion of the piston is thus transformed through the medium of the connecting rod B C into the rotatory motion of the crank shaft S, from which the motion is communicated to the propeller.

Dead Points.—An objection to this mechanism is that there are two points in the revolution of the crank when the connecting rod has no power to turn it, but produces only a direct thrust. These are when the connecting rod and crank are in the same straight line, and are called the *dead points* or *dead centres.*

This difficulty is overcome in the single cylinder engine by fitting a heavy *fly-wheel* to the shafting; after the engine is once started, the momentum of this wheel carries it over the dead points.

In an engine with two or more cylinders the cranks are placed at *various angles* to one another, so that when one is on the dead centres the others are not. Thus in the triple expansion engines fitted in steam ships the three cranks are placed at angles of 120°.

Crank Shaft.—The shape of the crank shaft is as shown in Fig. 37. A is called the *crank pin,* B B are the *crank arms* or *webs,* and C is the straight part of the shaft which revolves in the *main bearings* and to which the propeller shafting is attached by flange couplings and bolts.

Eccentrics.—It is also necessary to convert the rotatory motion of the shaft into the reciprocating motion of the slide valve. This might be done by a crank and connecting rod; but it is much more convenient to employ an eccentric with strap and rod, as shown in Fig. 38.

An *eccentric* is a circular disc of metal which is keyed on to the shaft in such a manner that its centre and the centre of the shaft do not coincide.

Two loose semicircular rings forming the *eccentric strap* are bolted together over the eccentric and are attached to the *eccentric rod.* These rings work between projecting edges on the

Digitized by Google

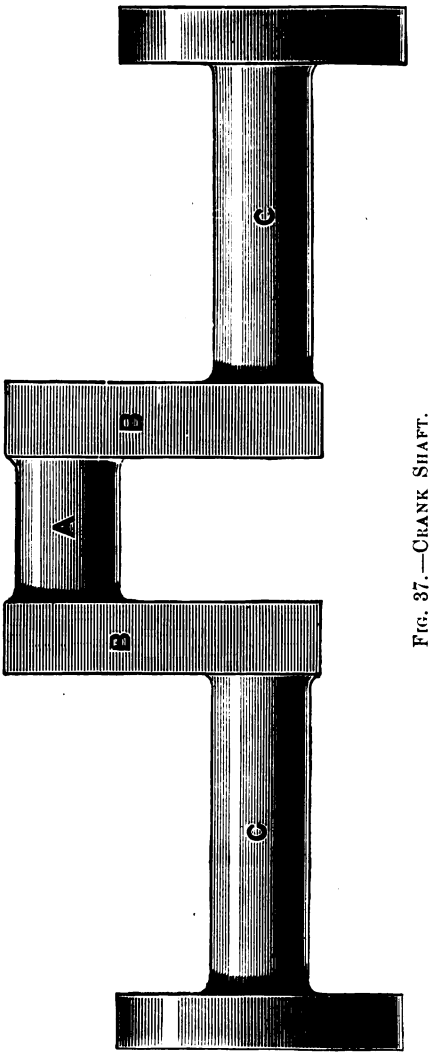

FIG. 37.—CRANK SHAFT.

Digitized by Google

Digitized by Google

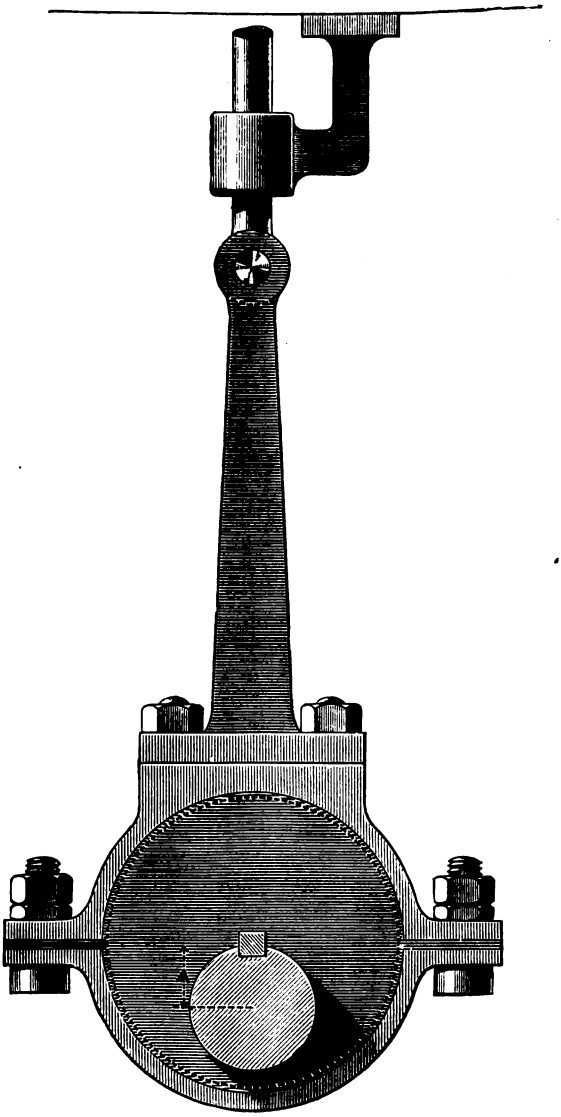

FIG. 38.—SKETCH ILLUSTRATING CONVERSION OF MOTION BY MEANS OF ECCENTRIC WITH STRAP AND ROD. (Page 74.)

Digitized by Google

Digitized by Google

Digitized by Google

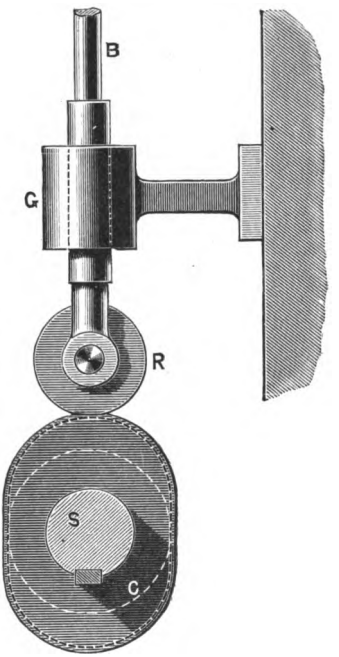

FIG. 39.—CAM.

Digitized by Google

eccentric, so as not to slip off it sideways. The eccentric rod is attached by a working joint to the slide valve rod, which latter is constrained to move in a straight line by a guide attached to the casing in which the slide valve works.

As the shaft revolves, carrying the eccentric with it, a reciprocating motion is produced in the slide rod—its amount being double the distance between the *true* centre of the eccentric and the centre of the shaft to which it is keyed, as shown at A (Fig. 38).

Cams.—The motion produced in the slide rod by an eccentric is of a regular character, with one up and one down motion for each revolution of the shaft. If an *irregular* motion be required, this can be produced by means of a *cam*, which is a curved plate or groove communicating motion to another piece of mechanism by the action of its curved edge.

Referring to Fig. 39, a cam of irregular shape is keyed on to a shaft S and revolves with it. A roller R, attached by a working joint to the rod B, is kept pressed against the cam by its own weight or by the action of a spring. The rod B is constrained to move in a straight line by a bracket guide G. A reciprocating motion of any kind might be transferred to B by varying the curvature of the cam. If the cam was circular as shown by the dotted line, the roller would revolve on it, but there would be no upward or downward motion : with a cam of the form shown, there would be two upward and downward motions during each of its revolutions. These motions may be varied as required by giving the necessary form to the cam.

Digitized by Google

LESSON VIII

Toothed Gearing.—Toothed wheels necessary to transmit power, short description of *spur wheels*, *bevel wheels* with outline sketch, *mitre wheels*, *mortice wheels*, *pinion*, *rack and pinion*, *helical gearing*.

Trains of wheels used in machines for raising weights, for obtaining increased or decreased velocity ratio in two shafts, or for changing direction of motion.

Worm and worm wheel, outline sketch.

The most simple way in which the circular motion of a shaft may be transferred from one axis to another is when a circular disc or plate moves another in its own plane by rolling contact. Referring to Fig. 40, suppose A and B to be circular plates, with flat edges, which are pressed against each other and capable of revolving about their axes; it would be quite possible for A to move B by friction alone, the two plates rolling smoothly and evenly upon each other without any slipping of the surfaces in contact. But we could not expect A to overcome any great resistance to motion in B; or, in other words, we could not in practice convey any considerable amount of force by the action of one disc upon the other.

The transmission of energy being an essential condition in machinery, the discs are provided with teeth, as shown in Fig. 41, and the maker endeavours to form and shape the teeth so that the motion shall be exactly the same as if one circle rolled upon another.

Since the motions of A and B are exactly the same as those of two circles rolling upon each other, such imaginary circles

Digitized by Google

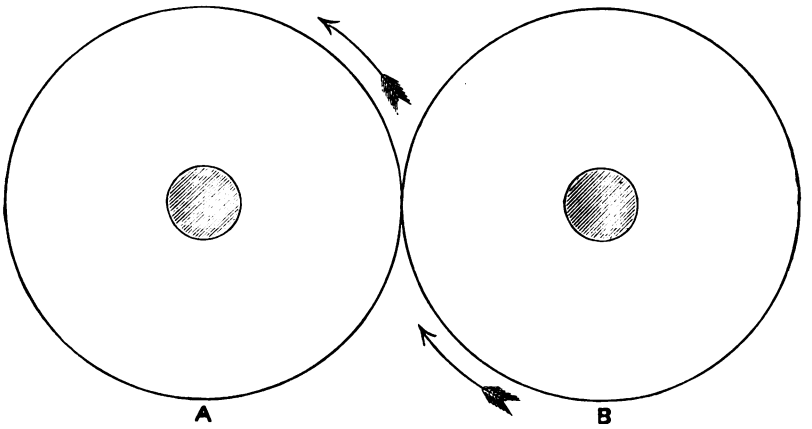

FIG. 40.—ROLLING CONTACT.

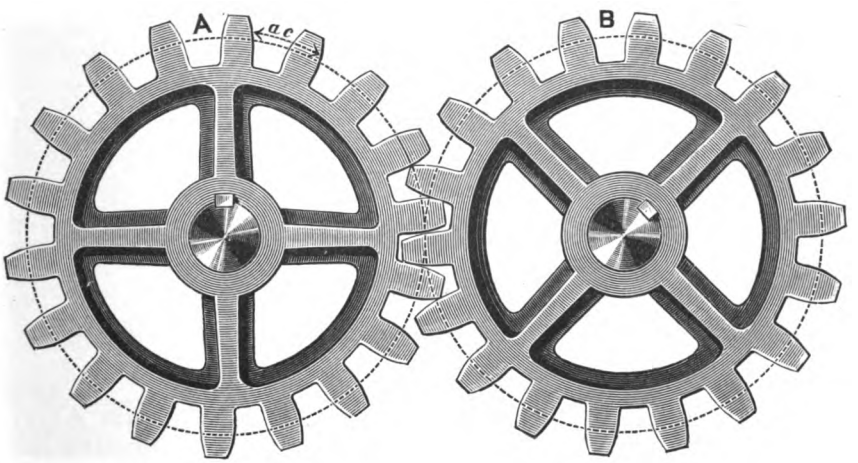

FIG. 41.—A PAIR OF TOOTHED WHEELS.

Digitized by Google

Digitized by Google

may always be conceived to exist, and are called the *pitch circles* of the wheels in question. They are represented by the dotted lines in Fig. 41.

So much of the tooth as lies within the pitch circle is called its *root* or *flank*, and the portion beyond the pitch circle is called its *point* or *addendum*.

When the teeth of two wheels are in such a position that one wheel can drive the other, they are said to be *in gear;* if the teeth are not in contact they are said to be *out of gear.* An arrangement of toothed wheels in machinery is usually spoken of as *toothed gearing.*

The *pitch* of a tooth is the space *ac* (Fig. 41) upon the pitch circle cut off by the corresponding edges of two consecutive teeth; or "pitch of a tooth" is the distance between the centres of two adjacent teeth measured along the pitch circle.

Formerly all toothed wheels were moulded from a complete wood pattern; but now, besides those made in this way, some are "machine moulded," that is, cast from a mould in which the spaces for the teeth have been formed by a specially designed machine; or for purposes in which great accuracy is necessary they are cast with a blank rim and the tooth spaces cut out with a revolving milling tool in a wheel cutting machine. Very much greater accuracy of pitch and a better form of tooth are secured by this than by the other methods.

The correct formation of the teeth is a very complicated problem, and we shall not consider it; the point aimed at is that the teeth in contact with each other may work with as little friction as possible. This is obtained if the teeth can be made to roll over each other, instead of sliding.

Spur wheels are simple toothed wheels, as shown in Fig. 42, in which the teeth project radially along the circumference. They are employed with parallel shafts.

If the number of teeth in each be equal, the shafts will move with equal velocity; the velocity may be varied by increasing or decreasing the number of teeth in the wheels as necessary.

Digitized by Google

Bevel wheels are toothed wheels whose axes are inclined at an angle to each other, as shown in Fig. 43. They are employed with shafts at an angle to each other, and act as if two conical surfaces were working together, only teeth have to be provided to transmit power.

Mitre wheels are *equal* bevel wheels whose axes are at *right angles* to each other.

Mortice Wheels.—When wheels are run at high velocities the teeth of one of each pair are sometimes made of wood, and are termed *cogs*. These cogs are firmly secured into grooves or *mortices* in a rim or frame of metal, and shaped by hand or machine (Fig. 44). As the wood cogs are of weaker material than iron, they are usually of greater thickness on the pitch line than the iron teeth working with them. They work much more quietly than metal wheels.

A *pinion* is a small wheel gearing into a larger one.

If teeth be cut on the surface of a bar and a pinion made to gear into the teeth, the arrangement is called a *rack and pinion*. The *rack*, if it be straight, may be considered as part of a wheel of infinite diameter.

Helical gearing is a modification of ordinary toothed gearing and is coming into general use. The pitch surfaces of helical wheels may be cones or cylinders as in bevel or spur gearing. Double helical teeth are shown in Fig. 45. Wheels of this kind work very smoothly, as the teeth have always two points touching in the plane of the axes; the teeth are also stronger than those of ordinary toothed wheels, and work together almost as noiselessly as mortice gearing.

Trains of toothed wheels are used in machines for raising heavy weights, for obtaining an increased or decreased velocity ratio in two shafts, or for changing the direction of motion. The driving wheel of each pair of wheels is called the *driver*, and the driven wheel the *follower*.

In machines for raising weights the usual arrangement is to fasten two wheels of unequal size upon every axis except the

Digitized by Google

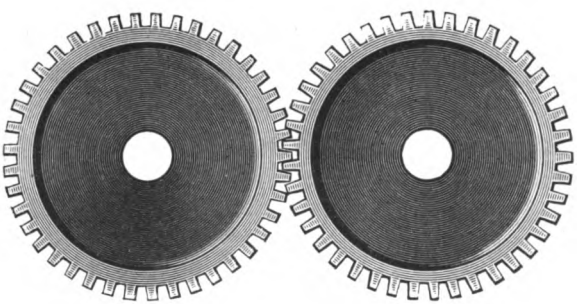

FIG. 42.—A PAIR OF SPUR WHEELS. (Page 85.)

FIG. 43.—A PAIR OF BEVEL WHEELS. (Page 86.)

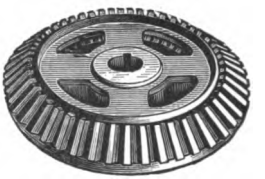

FIG. 44.—A MORTICE WHEEL. (Page 86.)

FIG. 45.—A PAIR OF DOUBLE HELICAL TOOTHED WHEELS. (Page 86.)

Digitized by Google

Digitized by Google

first and last, and to make the smaller wheel of any pair gear with the next largest of the series: the power being applied to the axis of the first small wheel or *pinion*, and the weight raised by a rope or chain coiled round the barrel or drum fixed to the axis of the last large wheel.

In this case a train of wheels is used to effect a *reduction* in velocity of two shafts: an *increase* of velocity may be obtained by the same means. Referring to Fig. 46, A and C are the *drivers*, and B and D the *followers*. Suppose the wheels A, B, C, D to contain a, b, c, d teeth respectively:

$$\text{then } \frac{a}{b} \times \frac{c}{d} \text{ or } \frac{\text{product of teeth in drivers}}{\text{product of teeth in followers}} = \text{No. of revolutions that D makes while A makes one,}$$

$$\text{or} = \text{The velocity ratio of the first and last shafts.}$$

Example.—A driving wheel containing 60 teeth gears into a pinion containing 12 teeth, which has on its axis another driver of 120 teeth, which gears into a pinion of 40 teeth. How many revolutions will the last pinion make while the first driver is making 3?

$$\text{Here } \frac{60}{12} \times \frac{120}{40} = \frac{x}{3};$$
$$\therefore x = 45.$$

Note that what is gained in power is lost in speed, and what is gained in speed is lost in power.

An illustration of a train of wheels in common use for altering the velocity ratio of two spindles is found in the method of driving the hour hand of a clock or watch, in which it is usual to reduce the motion of the minute hand to procure the necessary motion of the hour hand.

Referring to Fig. 47, the minute hand is fastened to the axis of the centre wheel K, and the hour hand is attached to a pipe which fits loosely upon this axis and derives its motion from the minute hand. All that has to be done is to connect the pipe and axis by a train of wheels which shall reduce the velocity in

Digitized by Google

the ratio of 1 to 12. Four wheels are used: the pinion K attached to the axis of the minute hand drives H, whence the motion passes through G to L and thus to the hour hand, which is fastened to the pipe on which L is fitted.

As an example, to reduce the velocity in the ratio of 1 to 12 we might take—

K as having 28 teeth
H „ 42 „
G „ 8 „
L „ 64 „

Then $\frac{K}{H} \times \frac{G}{L} = \frac{1}{12}$

An illustration of changing the *direction* of motion by means of a train of toothed wheels is found in the method of revolving two shafts in opposite directions by the same engine. Referring to Fig. 48, A is a shaft which is connected to and revolved by the engine; B is a mitre wheel keyed on to A, and connected to the mitre wheel keyed on to the hollow shaft C, by means of two other mitre wheels D and E, which revolve freely on pins attached to a fixed part. The change in the direction of revolution of the two shafts is shown by the arrows.

Worm and Worm Wheel.—This is a very useful method of obtaining mechanical advantage. It consists, as shown in Fig. 49, of two or three turns of a screw thread A working in the teeth of a wheel B. The wheel will advance one tooth for each complete revolution of the worm, if the worm is a single threaded screw; two teeth for a double and three for a triple threaded screw. The mechanical advantage is greater as the diameter and number of teeth in the worm wheel are increased; but in this case, as in other appliances for obtaining mechanical advantage, what is gained in power is lost in speed, and *vice versa*. This contrivance is frequently used on board ship,—for instance, in conveying the motion from the capstan engine to the capstan, for turning the main engines by hand gear when overhauling parts, etc. When used for the capstan the barrel or drum of

Digitized by Google

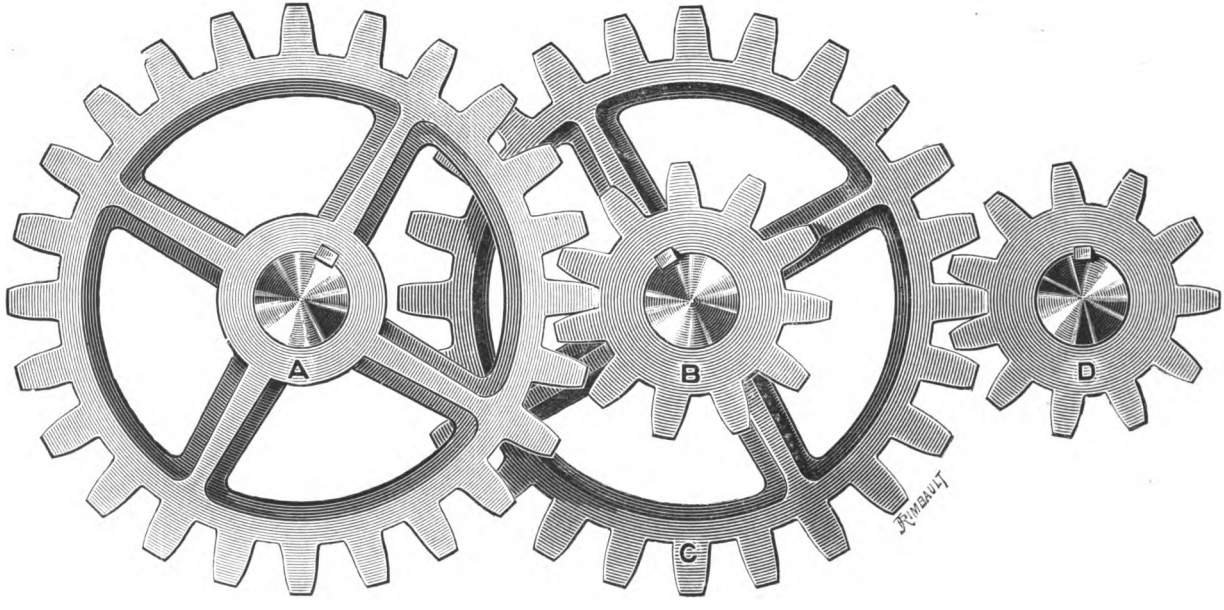

FIG. 46.—A TRAIN OF FOUR WHEELS. (Page 89.)

Digitized by Google

Digitized by Google

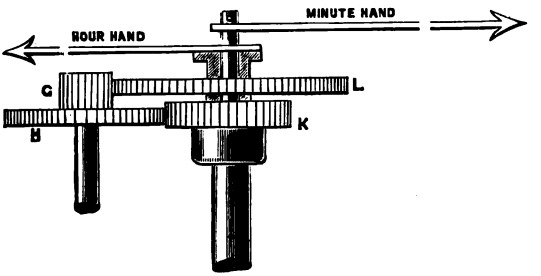

FIG. 47.—HOUR AND MINUTE HANDS OF A CLOCK OR WATCH. (Page 89.)

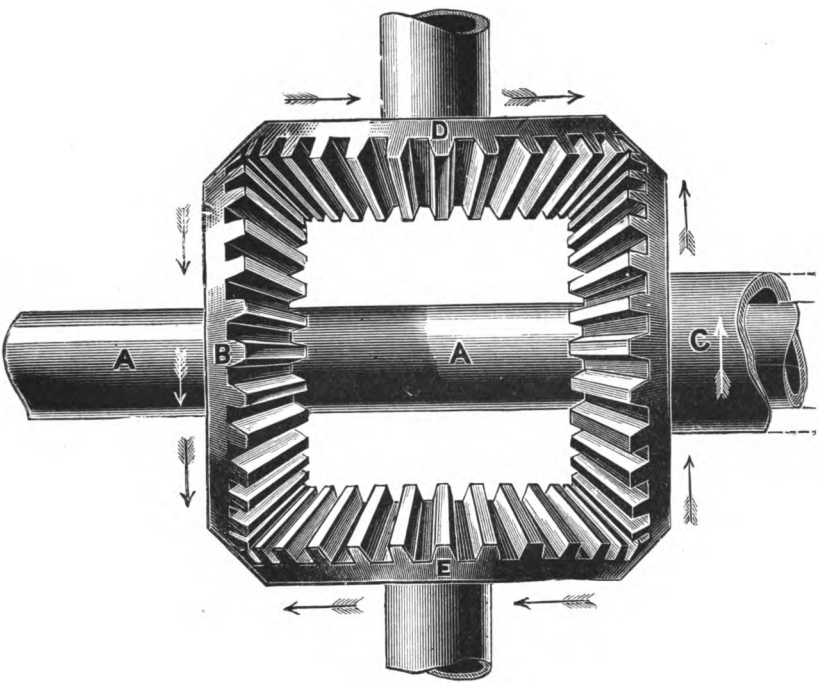

FIG. 48.—SKETCH SHOWING REVERSAL OF MOTION BY BEVEL WHEELS. (Page 90.)

Digitized by Google

Digitized by Google

the capstan is fixed to the worm wheel spindle and the shaft of the engine to the worm.

This appliance has the advantage that, as usually fitted, the worm, although it can drive the worm wheel, cannot be driven by it; so that a weight can be held in any position when being raised or lowered without other assistance.

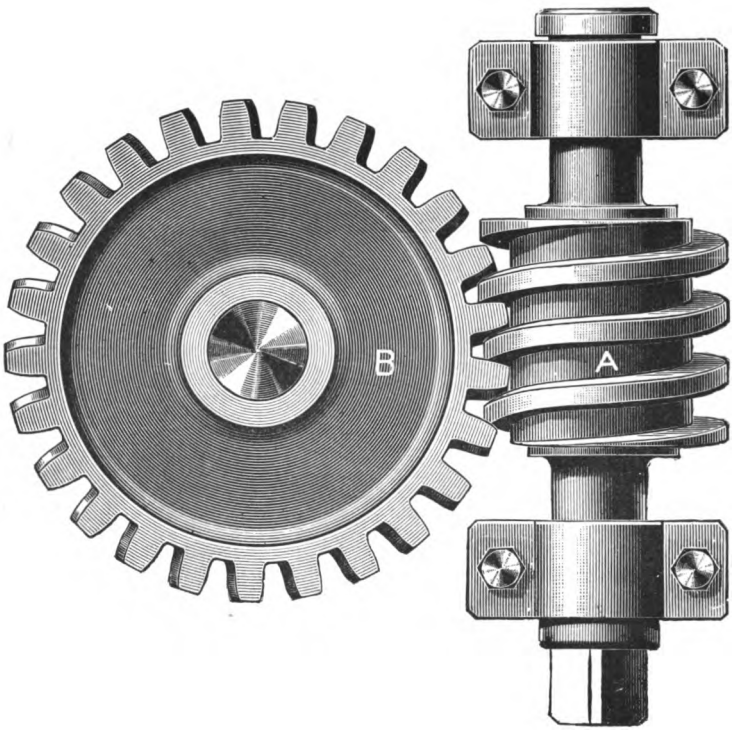

FIG. 49.—WORM AND WORM WHEEL. (Page 90.)

Digitized by Google

Digitized by Google

LESSON IX

Friction.—Resistance to one part of machine sliding over another due to *friction*. Friction lessened by making surfaces in contact *smooth*, by making surfaces working together of *different* metals, by use of *lubricants*. Action of lubricant in lessening friction, steady supply of lubricant necessary. Sketch of bearing fitted with *siphon lubricator*.

Friction lessened by mechanical means, by *friction wheels, etc.* Heat due to friction. Hot bearings.

Examples where friction is useful. Weston's *friction clutch* (sketch). *Brakes.* Sketch of winch fitted with *band brake.*

Friction is the name given to the resistance which one body experiences when sliding over another. The surfaces of bodies are never perfectly smooth; even the smoothest have inequalities which can neither be detected by the touch, nor by ordinary sight; hence when one body moves over the surface of another the elevations of one sink into the depressions of the other, and thus make a certain resistance to motion; this is called *friction.* It is a *force* which continually acts in opposition to actual or possible motion.

Friction is of two kinds: *sliding*, as when one body glides over another, such as the motion of a crank shaft in its bearings; and *rolling* friction, which occurs when one body rolls over another, as in the case of an ordinary wheel.

The latter is less than the former, for by the rolling, the inequalities of one body are raised over those of the other.

Friction is directly proportional to the pressure of the two surfaces against each other. The fraction of the pressure which

Digitized by Google

is required to overcome friction is called the *coefficient of friction.*

Friction is independent of the *extent* of the surfaces in contact, if the pressure is the same.

In an engine, where there are so many moving parts, it is of great importance to reduce friction as much as possible. This is done by making the surfaces in contact *smooth*, and of ample size; and where there are several bearings for one length of shafting, having all the bearings *exactly in line;* also by making the surfaces working together of different metals, and by the use of various kinds of *oils* or other *lubricants.*

Olive oil is used as a lubricant for external parts, also a mixture of oil, soft soap and water; for internal parts, such as the faces of slide valves in destroyers, graphite in fine powder or patent mineral oils; for wheel gearing, black lead and tallow.

The effect of lubrication on a pair of smooth metal surfaces is to interpose a thin film of the lubricant between them. This prevents their coming into actual contact. Whenever the lubricant is too thin, or the pressure between the surfaces too great, the lubricant is squeezed out and the two metals come into contact. They are then liable to adhere so firmly that portions of the metal will sometimes tear off before they will separate. Cutting or scoring results with a probable disablement of machinery.

Siphon Lubricator.—It is therefore necessary to have a constant and steady supply of the lubricant, which is usually kept up by some form of lubricator. The one in most general use for bearings, etc., is the *siphon lubricator.* Referring to Fig. 50, suppose a shaft to revolve in an ordinary pedestal bearing. A cup is fitted over the bearing having a tube in it which passes down from the top of the cup to the shaft. The cup is filled with oil, and a piece of worsted led from the cup into the tube. The worsted by *capillary attraction* draws the oil up from the cup and allows it to drip down the tube on to the shaft. When not in use, all that is necessary is to withdraw the worsted from

Digitized by Google

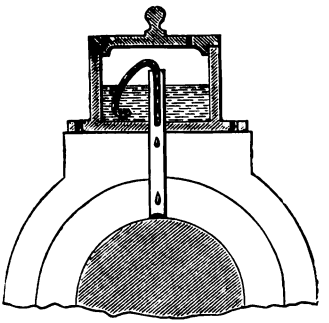

FIG. 50.—SIPHON LUBRICATOR ON PEDESTAL BEARING. (Page 98.)

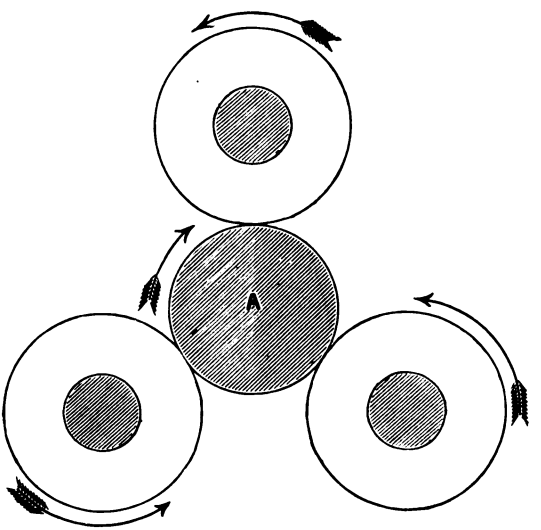

FIG. 51.—FRICTION WHEELS. (Page 101.)

Digitized by Google

Digitized by Google

the tube. A piece of wire is generally fastened to the worsted to facilitate its being pushed into the tube or withdrawn from it.

White Metal.—Bearings subject to great pressure, such as those of crank shafts, are generally made of gun metal, and are lined with *white metal*, which has the advantage of adjusting itself to any slight irregularities in the journal, and soon wearing to a bright smooth hard surface on which the steel works with a minimum of friction.

Water Lubrication.—Where the propeller shafting passes through the stern of a ship or through an outside bracket, lignum vitæ strips are dovetailed into the bearing and water allowed to flow between them. This has been found to be a good form of underwater bearing, because water is such an excellent lubricant for metal working on wood (p. 69, and Fig. 33).

Friction Wheels.—As rolling friction is considerably less than sliding friction, it is a great saving of power to convert the latter into the former, as is done in the case of *friction wheels* which are often used with light machinery. Referring to Fig. 51, the revolving shaft A, instead of being held in a bearing which completely surrounds it, is supported by the surrounding wheels which are free to turn on their own axes. The *ball bearings* of a bicycle are an instance in point, the axle revolving upon a series of small steel balls kept in their place by the outside casing of the bearing.

Hot Bearings.—There is always a certain amount of heat due to friction even in a well-designed and well-adjusted bearing. But if the bearing is kept clean and properly lubricated, the heat is never great, and it is carried off by *radiation.* Should the lubrication fail from any cause, or dirt get into the bearing through one of the oil holes, or in any other way, the friction and heat due to it may become excessive. Should a bearing become very hot, immediate and careful attention is necessary. Such a bearing should be slacked back and profusely lubricated, to clear away any dirt. Should the bearing become cool and the surfaces smooth, oil lubricants may possibly suffice to keep

Digitized by Google

it working cool, but it may become so excessively heated as to necessitate the stoppage of the engines for cooling, re-adjustment, or refitting of the bearing to avoid a breakdown. From this it will be seen that it is of the greatest importance to keep all steam and other machinery well lubricated and prevent any possible access of dust or dirt.

Examples where Friction is taken advantage of

The property of friction is taken advantage of in many ways. It may be often seen that a heavy load, such as a boat, can be supported by little exercise of power if a turn of the rope supporting it be taken round a cleat.

Weston's Friction Clutch.—This appliance is often used with steam capstans and windlasses for raising ships' anchors, etc., the force of friction being taken advantage of. An illustration of it is shown in Fig. 52. Here A represents a spur wheel fitted with a gun metal bush E and oil holes O, driven by an engine and revolving freely on a shaft C, which it may be necessary to drive or stop without stopping the engine.

A clutch box B is fitted to slide along feathers H H on shaft C, being worked sideways by a forked lever working in a groove K running round it. Circular rings R R are fitted to slide along feathers F F on A; and, alternately with these, rings S S are fitted to slide along feathers G G fastened inside of B. The shaft C is fitted with a collar D, which is held in its bearing so that it cannot move endways. Now if A be made to revolve and the clutch box B be moved along the shaft so that the rings R press against the rings S, the friction between them will cause the clutch box and shaft C to revolve with A. If it be necessary to stop C, this may be done by separating the rings R and S by moving the clutch box. A great advantage of this appliance is that supposing a sudden excessive load were put on A, it would only cause the rings to slip over each other; and a breakage of parts, which might take place if they were rigidly connected, would thereby be avoided.

Digitized by Google

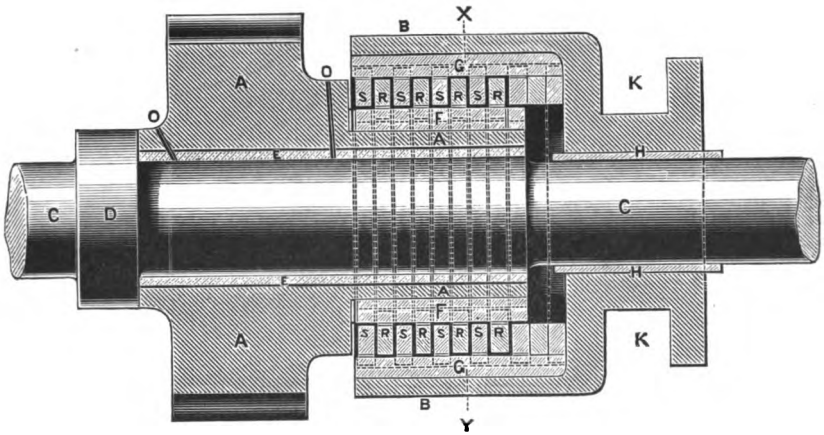

SECTIONAL ELEVATION.

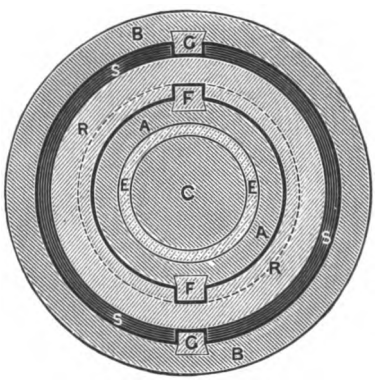

SECTION THROUGH X Y.

FIG. 52.—WESTON'S FRICTION CLUTCH.

Digitized by Google

Digitized by Google

Brakes, etc.—The force of friction is also employed in transmitting power from one shaft to another by leather belting or ropes, also in checking or controlling motion by means of *brakes* of various kinds. An illustration of a *band brake*, as fitted to one of Messrs. Tangyes' winches, is shown in Fig. 53; the brake is worked by the lever on the right side of sketch.

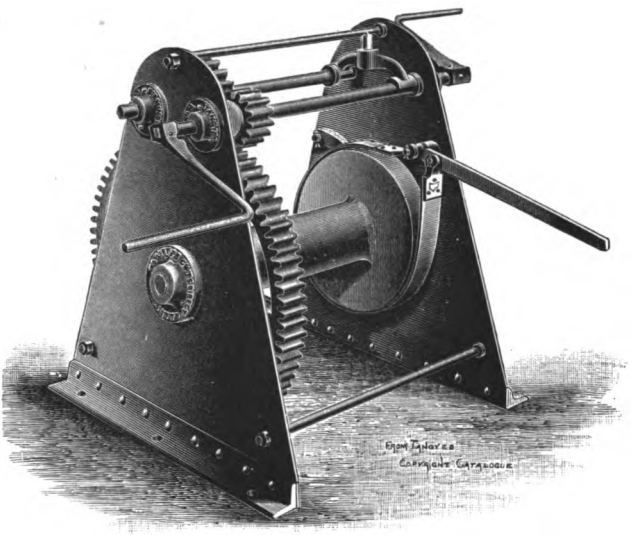

FIG. 53.—DOUBLE PURCHASE CRAB, FITTED WITH BAND BRAKE.

From Copyright Catalogue, by permission of Messrs. Tangyes, Limited, Birmingham.

Digitized by Google

Digitized by Google

LESSON X

PACKING JOINTS

Stuffing Boxes and Packing, joints of pipes, etc.—Explanation of method of making piston rod of steam engine work steam-tight in cylinder end by *stuffing box, gland,* and *packing.* Sketch of section. Packing used made of canvas and india-rubber or asbestos. *Metallic packing* used for high-pressure steam glands.

Metallic packing rings used for steam engine pistons, etc.

Method of keeping ram of hydraulic press water-tight by *cup leather,* sketch section. Double *cup leather* packing used for hydraulic pistons.

Steam pipes, etc., joined together by *flanges* and *bolts,* kept from leaking by *red lead cement,* etc.

Riveted joints *caulked.*

In machinery and shipbuilding, arrangements have to be made to prevent leakage of various kinds.

We will first consider the case of a piston rod working through the cylinder cover of a steam engine. It must work freely and yet no steam must leak past. This is effected by means of a *stuffing box, gland,* and *packing,* as shown in Fig. 54.

A is the piston rod and E the cylinder end or cover; the piston rod passes from the inside of the cylinder D through a hole, slightly larger than the rod, the upper part of which is lined with a *neck bush* G of gun metal, to prevent the piston rubbing against the cylinder cover itself. The lower part is considerably larger, and forms a chamber or *stuffing box* B. This is filled with separate rings of packing which are kept pressed

Digitized by Google

against the sides of the stuffing box and the rod by the *gland* C (also lined with gun metal), which is screwed up by means of the *studs* and *nuts* F.

The packings most commonly used for hot water and low pressures of steam are *elastic core* and *asbestos.* Elastic core packing is made by wrapping canvas steeped in a liquid solution of india-rubber, which on drying makes the turns of canvas stick closely together, round a central core of india-rubber. Asbestos packing is made by wrapping asbestos (which is a peculiar fibrous mineral product not affected by heat) round a core of india-rubber. Packings made of plaited hemp or *gasket* or of *cotton* are used for glands with cold water pressures.

For the high pressures of steam now used elastic core and asbestos packings are unsuitable, and *metallic* packing is generally used for high-pressure steam glands. It consists of a series of rings of a metallic alloy made up in segments; these fit into the stuffing box and are pressed against the rod by the action of suitable springs or other means.

The stuffing box and gland is adopted not only in the engines, but generally throughout the ship wherever it is desired to make a steam-, air-, or water-tight joint around a pipe, shaft, or rod, still allowing free action in the required direction. For instance, the stern shafting of a ship is made to work water-tight through the stern by means of this fitting.

An arrangement is usually fitted to glands of stuffing boxes of working rods, so that all the nuts may be screwed up together; by this means the gland is made to exert an equal pressure on the packing all round the rod, and cannot be screwed up unevenly.

Metallic Packing for Pistons, etc.—The pistons of steam engines are kept working steam-tight in their cylinders by means of *metallic packing rings,* either possessing sufficient elasticity to press them out against the inside of the cylinder, or pressed out by springs. This is described in a lesson on parts of engines

Digitized by Google

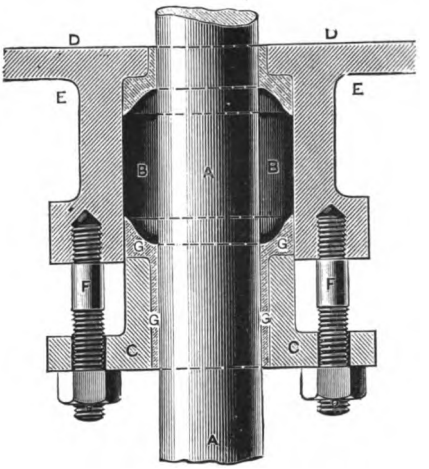

FIG. 54.—SECTION OF STUFFING BOX AND GLAND. (Page 107.)

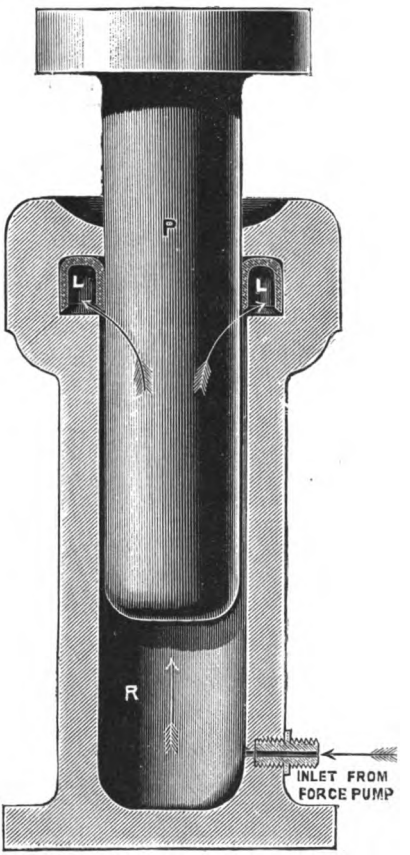

FIG. 55.—SECTION SHOWING CUP LEATHER OF BRAMAH PRESS. (Page 113.)

Digitized by Google

Digitized by Google

Digitized by Google

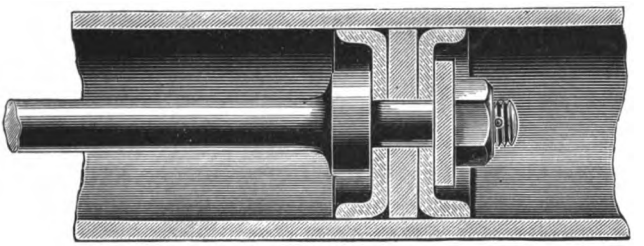

FIG. 56.—DOUBLE CUP LEATHER OF HYDRAULIC PISTON. (Page 113.)

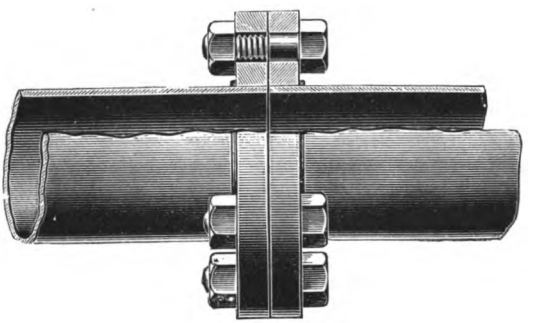

SECTIONAL ELEVATION.

END ELEVATION.

FIG. 57.—METHOD OF JOINING PIPES TOGETHER BY FLANGES. (Page 113.)

Digitized by Google

(Lesson XIX.). Pistons of pumps, etc., are often kept water-tight in a similar manner.

Cup Leather.—The stuffing box with gland and packing, although exceedingly well adapted for dealing with ordinary pressures, is unsuitable for the very high pressures used in hydraulic machinery.

The common method in use for these high pressures is the *cup leather* invented by Bramah. It consists of a circular piece of stout leather, saturated with oil so as to be impervious to water, in the centre of which a circular hole is cut. The leather L (Fig. 55) is bent so that a section of it represents a reversed letter U, and is fitted into a groove made in the neck of the cylinder R. This collar being concave to the pressure, in proportion as the pressure increases, it fits the more tightly against the ram P on one side, and the neck of the cylinder on the other, and prevents any escape of water.

Double Cup Leather.—The piston of a hydraulic engine may have great pressure on either side of it, and to keep it water-tight a *double* cup leather is used as shown in Fig. 56. It will be seen that from whichever side of the piston water pressure is applied, the cup leather on that side is forced outwards against the cylinder, thus preventing the passage of water to the other side of the piston. Other modifications of the cup leather are also used.

Pipe Joints.—Pipes for conveying steam, water, etc., are made in convenient lengths and fastened together by means of *flanges* and bolts and nuts.

A *flange* is a circular ring which is fitted at the end of a pipe. In the case of brass or copper, it is secured to the pipe by a specially made alloy of copper and zinc called *spelter*, which is melted and made to adhere firmly to both pipe and flange : this process is called *brazing*. The flange is of sufficient diameter to allow holes to be bored in it to take bolts and nuts (Fig. 57).

The faces of the flanges are made even, two flanges with corresponding holes in them are placed together, and with their

Digitized by Google

respective pipes are firmly bolted to each other. Before putting the flanges together, a thin layer of *red lead cement* (a mixture of red and white lead with linseed oil) is spread over one of them, the effect of this being to fill up any inequalities there may be in their surfaces. The red lead cement soon hardens and the joint is thus kept tight.

Sometimes *asbestos cloth*, or *sheet insertion* (that is, canvas steeped in a solution of india-rubber), or *copper wire gauze* covered with red lead cement, is used for this purpose, whichever is considered most suitable for the particular case.

CAULKING.—In joints of boilers and ship plating, the riveting draws the plates very closely together; but to prevent any possibility of leakage the edges of the plates are *fullered* and *caulked*. Referring to Fig. 58, B is part of a *fullering* tool, used to close up the plate, and C part of a *caulking* tool, used to burr down the edges of the plates: the other ends of these tools being hammered on by the workman until the joint is closed as necessary. In the best boiler work the plates are *planed* on the edges with a slight bevel before riveting, and this much facilitates the closing of the joint by fullering and caulking.

Digitized by Google

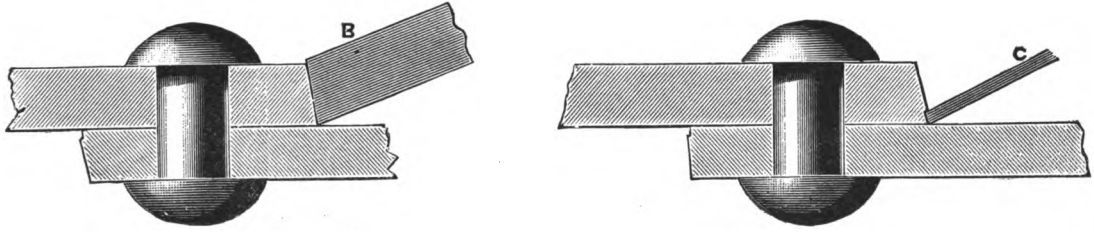

FIG. 58.—METHOD OF CAULKING JOINTS OF PLATES IN BOILERS.

Digitized by Google

Digitized by Google

LESSON XI

Valves and Cocks, used in machinery for regulating or controlling the admission or discharge of steam, water, etc.

1. Valves opened and closed by hand. Description of ordinary *stop valve*, with conical seated valve. Outline sketch of section. *Lift* need not exceed one-fourth diameter of opening. Usually fitted to *close* with *right-hand* motion.

2. Valves opened and closed by self-acting mechanism. Description of slide valve of steam engine.

3. Valves opened and closed by the pressure of a fluid. Description of *india-rubber disc valve. Metallic valve.* Description of *non-return valves, ball valves, safety valves, escape valves.*

Cocks.—Description of ordinary *straightway* cock, *sideway* cock, *threeway* cock. Position of score on end of plug tells whether cock is shut or open.

VALVES and COCKS are used in machinery for regulating or controlling the admission or discharge of steam, water, etc. For convenience of description we shall divide them into three types, which will include all those fitted in steam machinery:—

First.—Those opened and closed by hand, usually by turning a screw.

Second.—Those opened and closed by self-acting mechanism.

Third.—Those opened and closed by the pressure of a fluid.

Stop Valve.—We will describe the ordinary *stop valve* to illustrate the first type. Its general form and construction is shown in Fig. 59.

The inlet to the valve box is marked A and the outlet B. The valve C fits into a conical seating D, the faces of both of

Digitized by Google

which form an angle of 45° to the centre line of the valve. The valve is worked by the screwed spindle E, over which fits a wheel F; H is a stuffing box.

Stop valves are usually fitted so that the pressure of the steam, water, etc., may be under the valve, which is worked up from its conical seating by means of a wheel or handle on a spindle passing through a stuffing box and gland in the cover, and screwing through a *bridge* which is secured to the cover. The "lift" of the valve, that is the amount it is raised from its seating, need never exceed one-fourth the diameter of the hole which the valve uncloses, as the area around the valve is then equal to the area through the opening. Thus a valve 4 inches in diameter need only be lifted 1 inch to be wide open; but a sufficient supply of steam, etc., can often be got through a much smaller opening. It may be taken as a safe rule, that, for various reasons, a steam valve should *always be opened slowly and carefully;* this must be remembered when dealing with steam machinery.

It will be noticed that the under part of the valve is fitted with *feathers* or *guides.* These are to prevent the displacement of the valve and ensure its always coming fairly on to its seating; a central guide is sometimes fitted for the same purpose.

The whole of the parts are usually made of gun metal, on account of its strength and not being liable to corrosion by the action of water, etc. Valves fitted to machinery in steam-ships are usually made to *close with a right-hand motion,* that is, by moving the wheel or handle in the direction in which the hands of a watch revolve. Those in connection with the sea almost invariably do so.

We will describe the simplest form of *slide valve* for a steam engine to illustrate the second type.

Referring to Fig. 60, the *slide valve* H is rectangular in shape, and has a hollow space underneath it. It works in a steam-tight casing F, called the *slide jacket,* to which steam is admitted from the boiler through a regulating valve. By the action of

Digitized by Google

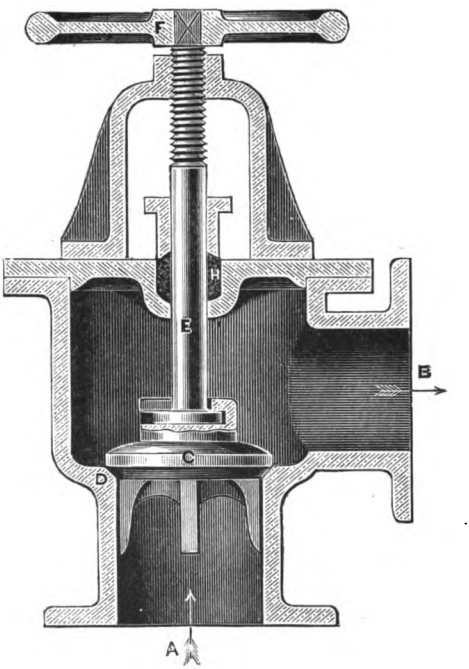

FIG. 59.—ORDINARY STOP VALVE. (Page 117.)

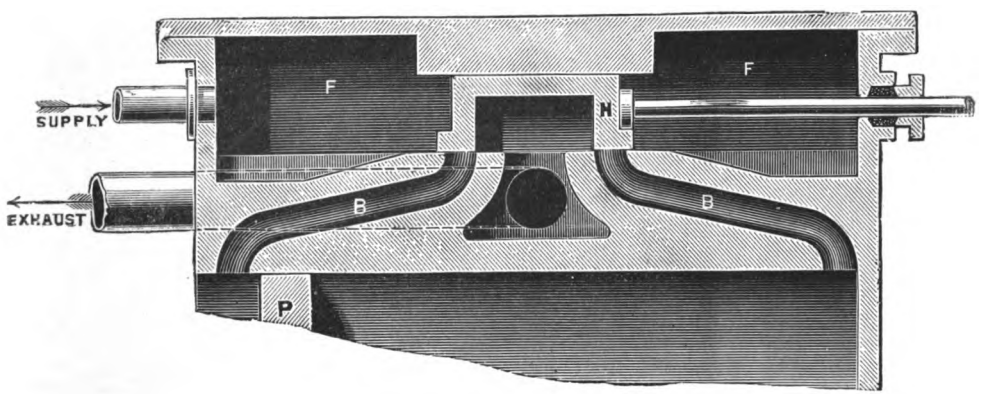

FIG. 60.—ORDINARY SLIDE VALVE. (Page 118.)

Digitized by Google

Digitized by Google

Digitized by Google

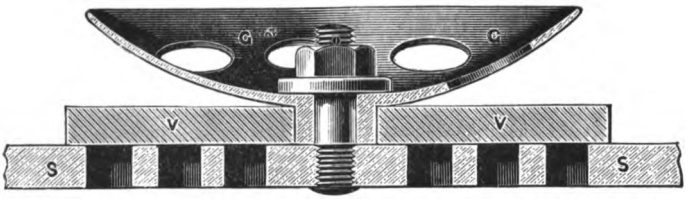

Sectional Elevation.

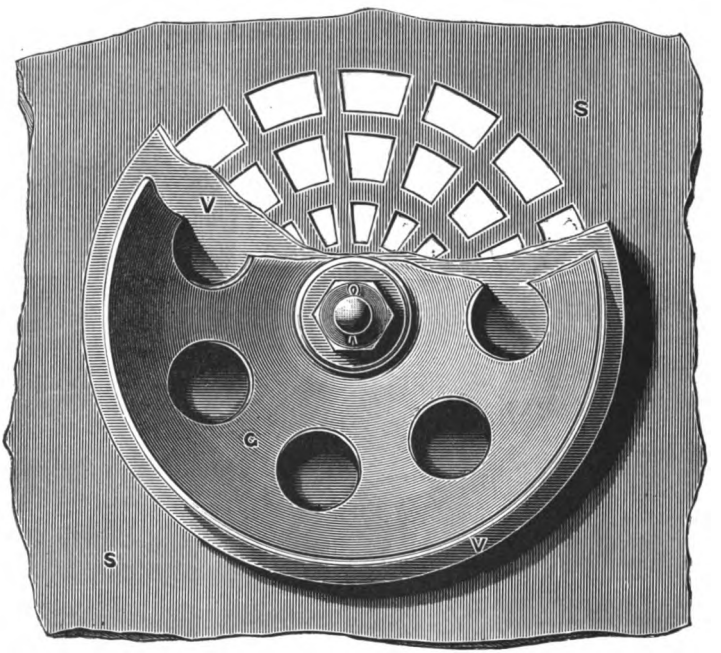

Plan.

Fig. 61.—India-rubber Disc Valve. (Page 127.)

Digitized by Google

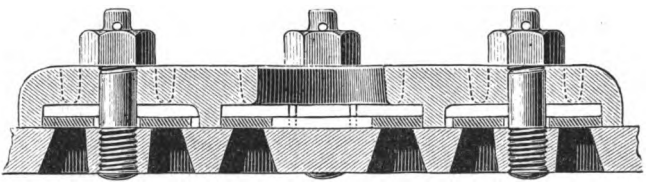

SECTIONAL ELEVATION.

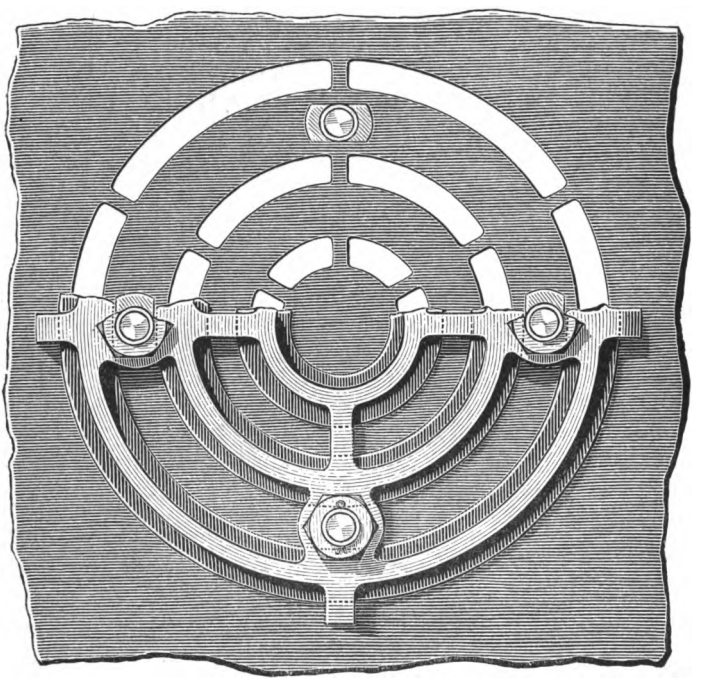

PLAN.

FIG. 61A.—METALLIC VALVE, RING PATTERN. (Page 127.)

Digitized by Google

Digitized by Google

Digitized by Google

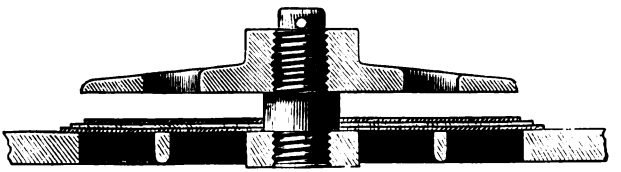

Sectional Elevation.

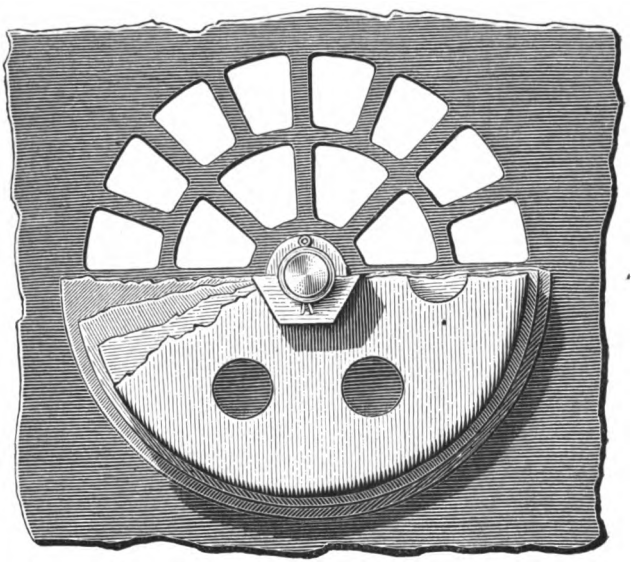

Plan.

Fig. 61B.—Metallic Valve, Disc Pattern.

Digitized by Google

the *eccentrics, link motion,* and *slide valve rod,* it is made to travel backwards and forwards over the ports or passages B B in the *cylinder face* for a certain fixed distance. In doing this it alternately places the *cylinder ports* B B and *piston* P in connection with the steam, and the atmosphere or condenser, and thus the reciprocating action of the piston is produced. This valve is described more fully in Lesson XX. and is there illustrated with working sketch.

We will describe an *india-rubber disc valve* to illustrate the third type (Fig. 61).

This type of valve was usually fitted to the *condenser air pump,* and many other pumps on board ship. Referring to Fig. 61, water is forced or drawn through the gratings in the seating S during one stroke of the pump, and lifting the india-rubber disc V passes through into the part above. On the return stroke the water is prevented from returning by the valve closing automatically by pressure on it, and covering the gratings. A *guard* G is fitted above the valve to prevent its lifting too far; it is secured with the valve to the seating by a nut and stud. The material used for these valves is *vulcanised india-rubber.*

Metallic valves are now used instead of these in air pumps; two recent types are shown in Figs. 61 A and B. The former consists of three annular pieces of sheet bronze, concentrically placed, and the latter of circular pieces, usually three in number, of varying diameter, placed one on the top of another. The usual guard is fitted in each case to regulate the lift of the valve.

Non-return valves are fitted in pipes to allow water, etc., to flow in one direction only. An ordinary conical valve in a valve box is fitted in the pipe and effects the purpose (Fig. 62). A is the inlet, B the outlet, C the valve, D a guide for the valve and to regulate its lift, E the valve box cover, and F guides or feathers to prevent the valve getting out of place. Should the water, etc., attempt to flow in the opposite direction the valve closes automatically.

Ball valves used to be fitted in pumps which deliver

Digitized by Google

water against high pressures, such as boiler feed pumps, instead of ordinary conical seated or flat valves. They are hollow spheres of gun metal made somewhat larger in diameter than the hole they cover. Being spherical they are sure to fit the seating in whatever position they are placed on it. A cage attached to the seating is fitted over them to keep them from lifting too high.

Safety valves are fitted to prevent a dangerous increase of pressure in a boiler. The valve, usually conical, similar to those already shown, but sometimes flat seated, is kept on its seating by a spiral spring, which is so adjusted as to exert a pressure on the top of the valve equal to the safe working pressure of steam on the whole area of the bottom of the valve. Should this be exceeded, the pressure of the spring will be overcome, and the valve will lift and steam escape, till the safe working pressure is again reached. For example : supposing a 4-inch valve to be fitted to a boiler working at 100 lbs. pressure per sq. in.—this valve would have to be kept on its seating by a spring exerting a pressure on it of 1256·64 lbs., neglecting weight of valve and spindle—

For area of valve $= \pi r^2$
$= 3{\cdot}1416 \times 2^2$
$= 12{\cdot}5664$ sq. in.
$\therefore$ total pressure on valve $= 12{\cdot}5664 \times 100$ lbs.
$= 1256{\cdot}64$.

Escape or *relief valves* are fitted to various parts of machinery, such as cylinders of steam engines, etc., to prevent a dangerous increase of pressure. They are very similar to safety valves, and their action is the same.

Cocks are also fitted to machinery to control the admission or discharge of steam, water, etc.

A *cock* consists of a *shell* A (Fig. 63), with a passage D through it, which may be opened or closed by means of a *plug* C, with a corresponding passage through it. The plug and shell are generally conical in shape, and the former is kept in place by

Digitized by Google

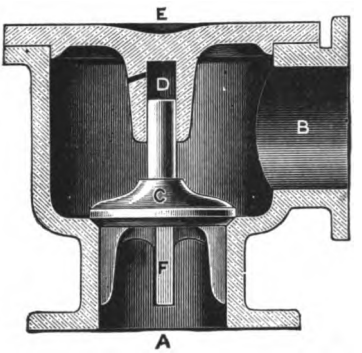

FIG. 62.—PUMP VALVE (NON-RETURN). (Page 127.)

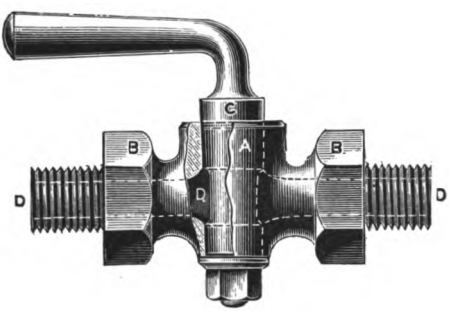

FIG. 63.—ORDINARY STRAIGHTWAY COCK. (Page 128.)

Digitized by Google

Digitized by Google

means of a nut and washer at the bottom for small sizes, or a gland and studs at the top for large sizes. If the plug is placed so that the passage through it corresponds with the passage in the shell, the cock is said to be *open*. But if it be turned so that the solid part of the plug closes the passage, the cock is *shut*. The shell has hexagons B formed on it for convenience of securing the cock in place.

In a *straightway* cock the passage way for water, etc., is straight through the shell.

In a *sideway* cock the plug is hollow, and the water, etc., instead of passing straight through, when the cock is open, passes through the plug and turns off at right angles through the shell.

In a *threeway* cock the water, etc., after passing through the plug, may be turned in any one of three directions at pleasure.

Cocks of the type shown in the sketch are seldom used for sizes over half an inch diameter of waterway. For larger sized cocks the plugs are usually held in place by glands and packing; fitted with squares and worked by separate handles. The shells also are secured in place by flanges and bolts, instead of by screws as shown.

The passage in the plug, with reference to the shell, in the description of cock shown in Fig. 63, is usually (not always) arranged in line with the handle; but in cocks having plugs with square ends for a handle to fit on, the position of the passage in plug may always be told by a score mark made on the top of the plug; the score in the plug of a sideway or threeway cock only goes half-way across the top.

Digitized by Google

LESSON XII

Pumps.—Explanation of working of *lift pump*, outline sketch, limit of working.

Explanation of working of *force pumps*, outline sketches of *single* and *double-acting force pumps*. Hydraulic jack.

Explanation of working of *centrifugal pump*, its advantages and disadvantages; outline sketch, showing direction in which vanes revolve.

Air fans. Ejectors.

PUMPS.—The pressure which the air exerts on a body is, under ordinary conditions, about 15 lbs. per sq. in. This is the same pressure as would be exerted by a column of water 34 feet high, or by a column of mercury 30 inches high.

If one end of a tube be placed in water and air removed from the other, the atmosphere pressure on the surface of the water will force it up the tube. This principle is employed in the common lift pump. The theoretical limit to the height to which water would rise in the tube is 34 feet.

The various parts entering into the construction of a pump are the *barrel*, the *piston*, or in some cases a *plunger*, the *valves*, and the *suction* and *delivery pipes*. The barrel (or cylinder) is bored out smoothly, and in it works the piston (or plunger), which is *packed* round its circumference to make it work fairly tight against the barrel. The valves are non-return valves, of metal, india-rubber, leather, etc., which alternately close and open the apertures which connect the barrel with the pipes. The most usual forms of valves fitted to pumps are the *disc valves*,

Digitized by Google

Digitized by Google

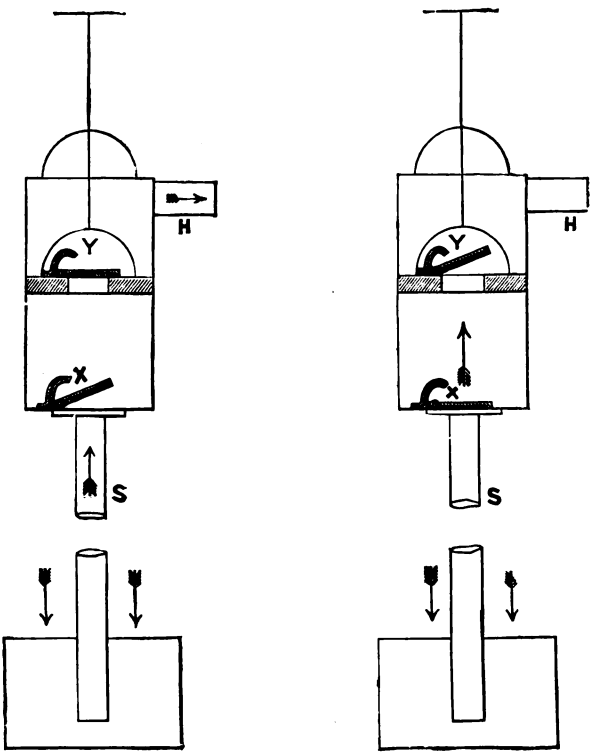

PISTON ASCENDING. PISTON DESCENDING.

FIG. 64.—ORDINARY LIFT PUMP (*outline*).

Digitized by Google

shown in Figs. 61, 61A, and 61B, or the *conical valve*, as shown in Fig. 62; these valves are described on p. 127.

An outline sketch of an ordinary lift pump is given in Fig. 64. The action of the pump is as follows:—As the piston or pump bucket rises, the valve X opens and valve Y closes, and the air in suction pipe S rises into pump barrel. As piston descends X closes, and air that was in barrel is driven through Y and out through H.

This action goes on till the air is exhausted from the barrel; then water supplies its place owing to the external atmospheric pressure on the surface of the water in the reservoir, and the pump lifts the water which passes up through X and Y out through H. It is evident that water is delivered through H on the upstroke only.

Force Pumps.—These depend on the same principle as lift pumps as far as the supply of water is concerned, but they are fitted to deliver water against a pressure, as in boiler feed pumps, or to force it to a height, as in a fire engine, and are made single or double acting.

An outline sketch of a single acting force pump is given in Fig. 65. Its working is as follows:—As plunger A ascends, the valve X opens and water flows in through suction pipe S. As A descends, the valve X closes, Y opens and the water is forced through Y into delivery pipe H. As A ascends again Y closes and X opens, when more water is drawn in, and so on. The pump being *single acting* the water is only delivered into H on the downstroke.

An outline sketch of a double acting force pump is given in Fig. 66. Its working is as follows:—As piston A descends, the valve X opens and water is drawn up through suction pipe S. As A ascends, X closes and water is forced through the valve Y into delivery pipe H; also at the same time water is being drawn through X′, which opens. On piston again descending, X opens, X′ closes, Y′ opens and water is forced though Y′ into delivery H and Y closes. At *each* stroke of the pump, therefore,

Digitized by Google

water is drawn from S and delivered into H. The pump is consequently called *double acting.*

Although, as before stated, the theoretical limit to the height of the pump above the level of the reservoir water is 34 feet, yet practically, 28 feet is the *limit of working,* as it is impossible to exhaust all the air from the suction pipe, or, in other words, to obtain a perfect vacuum.

Hydraulic Jack.—The hydraulic jack is an appliance in common use on board ship for lifting heavy weights. It is usually made of cast-steel. Referring to Fig. 67, the lower part is accurately bored out and is fitted with a ram made water-tight by a *cup leather.* The upper part contains a single acting force pump, and is filled with water. When the ram is as far in as it will go, the jack is placed in a suitable position under the weight to be lifted, and the pump worked by means of a handle fitted to the square shown at upper part of right side of cylinder. This forces the water through a small hole on to the top of the ram, and when the pressure is sufficient the cylinder rises with the weight, the ram remaining fixed. When it is required to lower the weight, the small valve, shown on the right, is opened, which allows the water to flow back again into the upper part. It is sometimes convenient, when the jack has to be used in a confined space, to raise the weight by means of the projection shown on the bottom of the cylinder.

In using a hydraulic jack to lift a given weight, it may be useful to remember that the pressure on the plunger of the pump is to the pressure on the ram as area of plunger is to area of ram. Thus if their diameters be $\frac{1}{2}$ an inch and 5 inches respectively, a pressure of 1 ton on the plunger would give 100 tons on the ram. That is, the jack would lift 100 tons (if friction be disregarded).

$$\text{For} \quad 1 \text{ ton} : x :: \tfrac{22}{7} \times \tfrac{1}{10} : \tfrac{22}{7} \times \tfrac{25}{4};$$
$$\therefore x = 100 \text{ tons.}$$

Digitized by Google

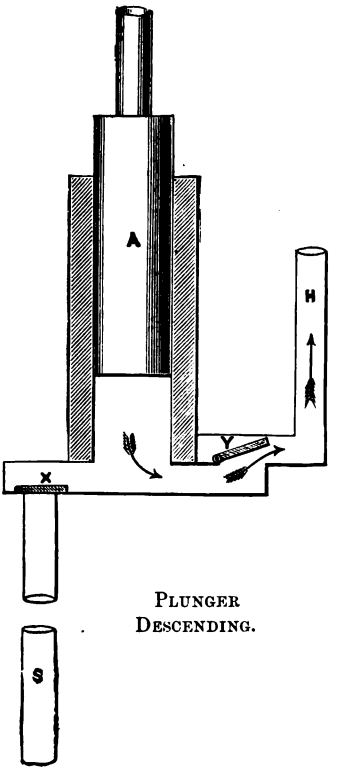

PLUNGER
DESCENDING.

FIG. 65.
SINGLE ACTING FORCE PUMP
(*outline*). (Page 135.)

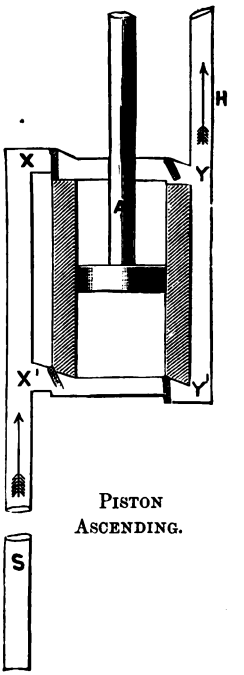

PISTON
ASCENDING.

FIG. 66.
DOUBLE ACTING FORCE PUMP
(*outline*). (Page 135.)

Digitized by Google

Digitized by Google

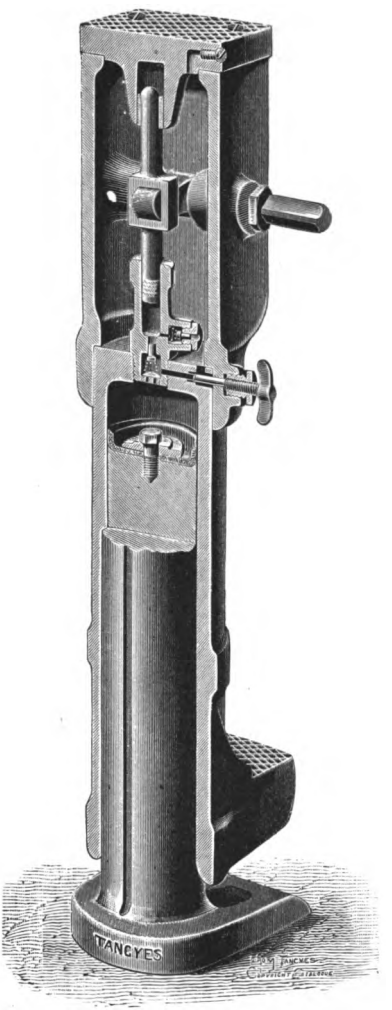

FIG. 67.—HYDRAULIC JACK. (Page 136.)

From Copyright Catalogue, by permission of Messrs. Tangyes, Limited, Birmingham.

Digitized by Google

Digitized by Google

Centrifugal Pump.—This type of pump consists of a shaft, to which a number of curved metal vanes are attached. The vanes and shaft revolve in a casing and in a direction such that the *convex* part of the vanes is in advance. All the parts are made of gun metal to prevent oxidation.

Referring to Fig. 68, water is admitted to the centre of the pump and, on meeting the revolving vanes, is thrown off by centrifugal force against the circumference of the casing, which has an outlet through which the water escapes.

In nearly all large steam-ships centrifugal pumps are used for circulating the cooling water through the condenser tubes, to condense the steam after being used in the engines.

Its *advantages* are smooth working, no pump valves to get out of order or choked up, and if the delivery valve should be shut and the pump started, no harm would be done, as the water would simply be churned.

Its *disadvantages* are that it will not draw water from any great depth, nor discharge it to any great height. Makers of these pumps say that 40 feet total lift (20 feet below pump and 20 feet above) is as much as they will work at efficiently.

Air fans for ventilating purposes, forced draughts in stokeholds, etc., are made on the centrifugal principle. A tube from a cowl on the upper deck is led down to the centre part or inlet of the fan, and the outlet which is at the circumference of the casing leads to trunks passing through various parts of the ship. These trunks have outlets in them which can be opened or closed by means of small sliding doors or some other similar means. In the case of stokehold forced draught, the delivery of the fan itself is usually open to the stokehold and simply protected by a wire guard.

Ejectors.—Ejectors are sometimes fitted to steam-boats for getting rid of water in the bilges, etc., by blowing it overboard with a steam jet. Referring to Fig. 69, it will be seen that a steam pipe S from the boiler is led over the end of the suction pipe B from the bilge. When steam is turned on, the rush of

Digitized by Google

steam past the mouth of the suction pipe exhausts the air in it, and the external pressure of the atmosphere forces the water up the pipe, whence it is carried with the steam through the discharge pipe D overboard. This is the simplest form of ejector, and one that is generally fitted to small steam-boats. A stop-cock or non-return valve is fitted at C to prevent the passage of water into the boat when the ejector is not in use.

Digitized by Google

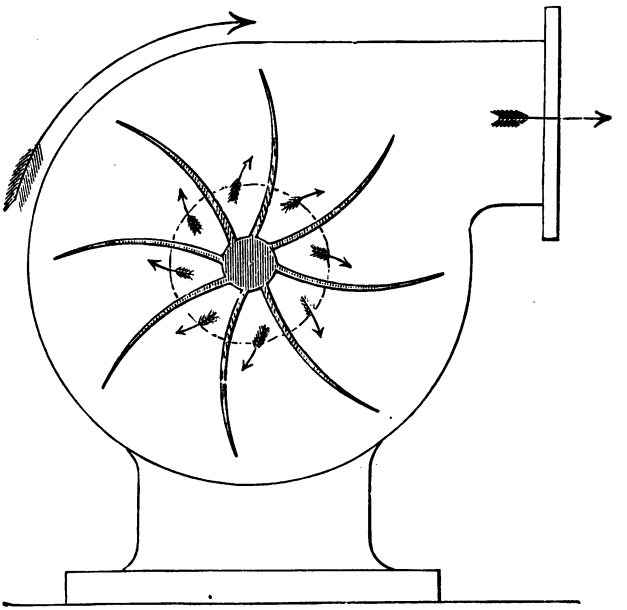

FIG. 68.—CENTRIFUGAL PUMP (*outline*). (Page 141.)

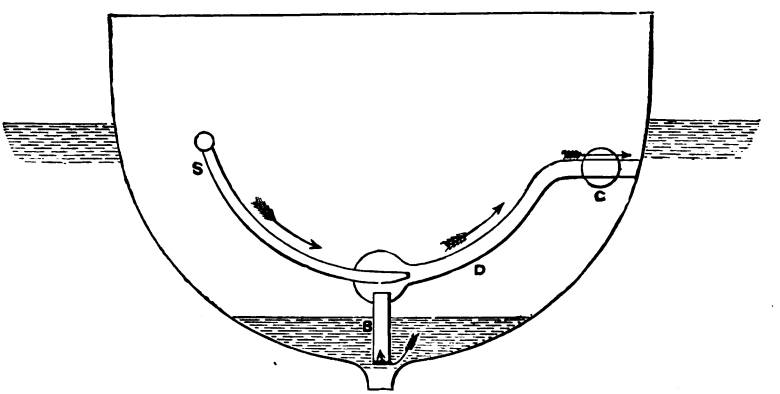

FIG. 69.—OUTLINE SECTION OF BOAT SHOWING EJECTOR. (Page 141.)

Digitized by Google

Digitized by Google

THE MARINE STEAM ENGINE

INTRODUCTORY

It is proposed in the following lessons to give a short description of the principal types of boilers and engines, with their fittings and parts, used for the propulsion of steam-ships, with a brief account of the physical principles of the Marine Steam Engine.

It is not the intention to deal with all the various kinds of boilers and engines, with their details; but there are certain leading features and principles which are found in all, and it is hoped that this course of lessons will, by pointing them out and explaining them, prove a good introduction to the study of the Marine Steam Engine.

We shall divide the work into twelve lessons, dealing with—

		LESSON
1. 2.	Boilers	13 and 14
3.	Fuel, Combustion, and Air Supply	15
4.	Evaporation of Water and Generation of Steam	16
5.	Fittings of Boilers	17
6.	Fittings between the Boilers and Engines	18
7. 8.	The Engine and its Parts	19 and 20
9.	Condensation and Condensers	21
10.	Expansion of Steam and Expansive Working	22
11.	Work and Horse Power. The Indicator	23
12.	Propulsion by Screw Propellers	24

Digitized by Google

BOILERS AND BOILER MOUNTINGS

LESSON XIII

Boilers.—Advantage of cylindrical over square form. Names and uses of parts: *shell, front, back, furnaces, combustion chamber, tubes, heating surfaces, tube plates, furnace bars, grate surface, ash pit, bearing bars, furnace door, ash-pit door* or *draught plate, bridge, water line, steam space, water space, stays, stay tubes, manhole doors, mudhole doors, smoke box, uptake, funnel, damper, air casing, lagging.*

Sketch (section through furnace, etc.) of cylindrical "Return tube" marine boiler.

In all the earlier steam-ships, using steam of pressures up to 30 lbs. per sq. in., the boilers were made of the square or box form. These gave very good results as far as economy in coal consumption went, and were of a convenient shape for stowing on board ship. But as increased steam pressures came into use, the square type had to be abandoned, as the flat sides needed so many stays to prevent them from bulging outwards, that the boiler became too heavy and too difficult to clean internally; and the cylindrical type was introduced, as that is naturally the most practical shape to resist internal pressures, which in boilers now being made for steam-ships often exceed 200 lbs. per sq. in.

Although the cylindrical boiler is not so economical as the old box boiler, yet the advantages of using steam of high pressure far outweigh the slight loss of economy in coal consumption.

The most common type of cylindrical boiler is the "Return

Digitized by Google

Digitized by Google

Scale $\frac{1}{4}$ *inch* = 1 *foot.*

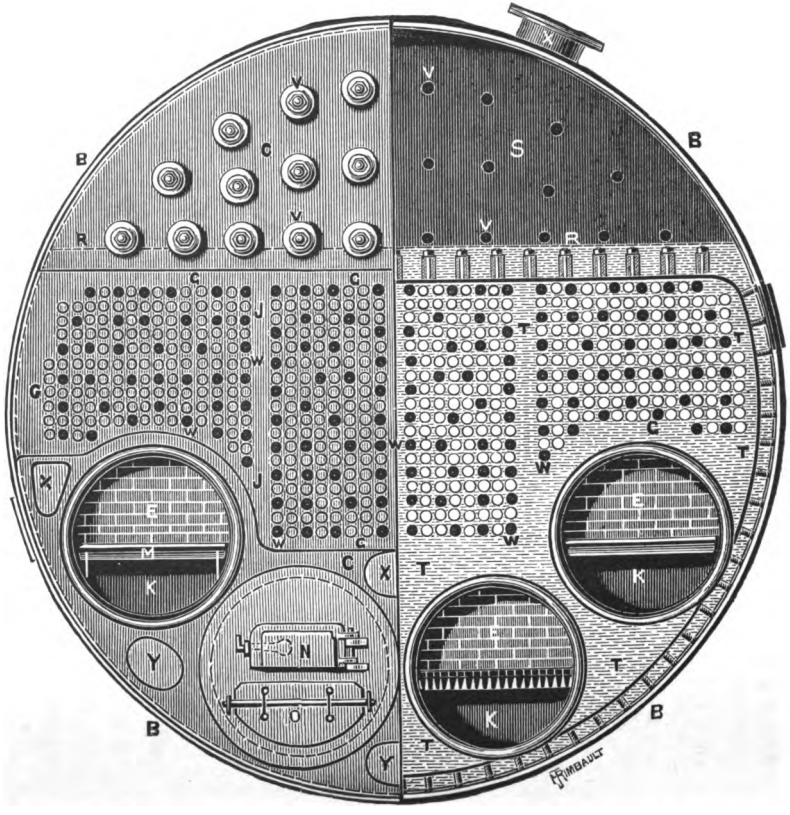

FIG. 70.—FRONT VIEW, WITH SECTION ACROSS FURNACES, ETC.

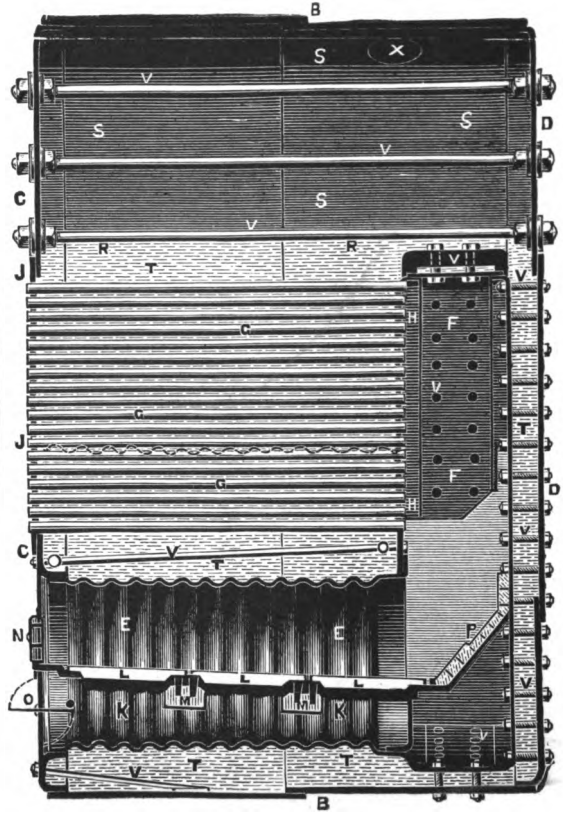

FIG. 71.—SECTION THROUGH FURNACE, ETC.

Digitized by Google

tube" or "Double-ended return tube" boiler, called "Scotch boilers." "Through tube" boilers are fitted in small ships, and in the case of torpedo-boats, etc., boilers of the "Locomotive" type.

These are all "tubular" boilers; the flames pass through tubes, which are surrounded by water and form the principal heating surface.

"Water-tube" or "Tubulous" boilers are now being introduced, in which tubes filled with water are surrounded by flames.

It is necessary that the boilers of warships, and of those ships of the mercantile navy which would be used as cruisers in war time, should be below the water-line, so that the water may act as armour for them: for ordinary merchant ships no such restriction is necessary.

We will first describe the "Return tube" boiler as fitted to ships with considerable draught of water.

Fig. 70 gives a front view, with section across furnaces, etc., of one of these boilers.

Fig. 71 gives a longitudinal section through furnace of the same boiler.

Referring to Figs. 70 and 71,

B, represents the *shell.*
C, *Front* of boiler.
D, *Back.*
E, *Furnaces.*
F, *Combustion chamber.*
G, *Tubes.*
H, *Back tube plate.*
J, *Front tube plate.*
K, *Ash pits.*
L, *Furnace bars.*
M, *Bearing bars.*
N, *Furnace door.*
O, *Ash-pit door* or *draught plate.*
P, *Bridge.*
R, *Water line.*
S, *Steam space.*
T, *Water space.*
V, *Stays.*
W, *Stay tubes.*
X, *Manholes.*
Y, *Mudholes.*

The *shell* is made up of two belts of mild steel plates, the edge of one lapping over the other, and riveted together; it is *cylindrical* in shape, that being, as before stated, the best form to resist internal pressure. The boiler shown in sketch is 16 ft. in diameter and 10½ ft. front to back.

Digitized by Google

The *front* and *back* of the boiler are made up of flat plates; they are circular in form, and have their edges flanged, or bent up, so that they can be riveted to the ends of the shell. The advantages of the flanged joint are explained on p. 39.

The *furnaces* are cylindrical in shape, about 3 ft. 6 in. in diameter, and 7 ft. long; their front ends are riveted to flanged holes in the front of the boiler, and their back ends to the combustion chamber. The cylindrical form is not so well adapted to resist an external as an internal pressure; and many means have been devised to strengthen furnaces so as to enable them to withstand the external pressure to which they are subjected. The *corrugated furnace* as shown in the sketch, invented by Mr. Samson Fox of Leeds, is in very general use in ships' boilers. The *Purves' furnace* is used in some boilers. The plate of which this kind of furnace is made has ribs rolled on it, which run continuously round the outer surface of the furnace when it is completed, and strengthen it very considerably. These ribs are spaced about 9 in. apart and project about $1\frac{1}{2}$ in. from the plate. A form of furnace invented by Mr. Morison, also with strengthening rings, is being used in some of H.M. ships.

Combustion Chamber.—The back ends of the furnaces open into a space called the *combustion chamber;* its object is to afford room for the complete combustion of the gases driven out of the fuel by the heat of the furnace.

Tubes: Heating Surface.—The *tubes* are led from the part of the combustion chamber above the furnaces to the corresponding part of the front of the boiler. They form a convenient method of providing a large extent of heating surface in a small space, with the smallest possible weight of material. Other heating surface is provided by the tops of the furnaces and the top and sides of the combustion chambers, but the tubes provide by far the greatest amount. The part of the combustion chamber pierced by tubes is called the *back tube plate*, the corresponding part of the front of the boiler is called the *front tube plate.* The ends of the tubes are held firmly in the holes in the tube plates

Digitized by Google

by being expanded into them by specially made appliances, called tube expanders.

Furnace Bars, Grate Surface.—The *furnaces* are divided into two parts by the *furnace bars*, which form the *grate surface* on which the fuel is burnt; the fires occupy the part above the bars, the part beneath is called the *ash pit.* The furnace bars are arranged with an air space of from $\frac{3}{8}$ths to $\frac{1}{2}$ an inch between each, to allow air to pass from the ash pit to the fuel, and ashes to fall through; they are usually fitted in three rows or tiers, and supported at each end by the *bearing bars*, which rest in brackets secured to the sides of the furnaces. The letters M M in the sketches refer to the bars running across the furnaces, and not to the brackets which support them.

Furnace Doors.—The furnaces are supplied with fuel through the *furnace doors;* these are arranged with gratings which allow air to pass to the top of the fuel, and a catch is usually fitted to keep the doors open when putting in coals in a seaway.

Draught Plates.—The ash pits are also provided with doors, called *ash-pit doors* or *draught plates;* these serve to regulate the supply of air to the furnaces, and are fitted so that they can be opened to any desired extent.

Bridge.—The backs of the furnaces are formed by the *bridges*, which are usually built with fire bricks.

Ash Pans.—It is necessary to fit trays or *ash pans* at the bottoms of corrugated furnaces to enable ashes to be drawn readily; these may be filled with water if necessary.

The *water line* is about 9 inches above the top row of tubes; the space above it is called the *steam space*, the part below the *water space.*

It will be seen from Figs. 70 and 71 that the whole of the furnaces, combustion chamber, and tubes are surrounded by water.

Stays.—Whenever there are flat or nearly flat surfaces in a boiler, provision must be made to prevent their bulging and collapsing under pressure. This is effected by means of *stays;*

Digitized by Google

the long stays shown in the steam space, brace together the upper parts of the back and front of the boiler; their ends are fitted with large washers as shown, to distribute their support over as much area of plate as possible; the stays at the back, bottom, and sides of the combustion chamber prevent it and the back of the boiler from collapsing or bulging under pressure. The top of the combustion chamber is supported by specially made stays as shown in sketch.

Stay tubes are fitted at intervals among the ordinary tubes to prevent the tube plates from being forced apart; they are thicker than the ordinary tubes and are screwed into both tube plates and expanded, whereas the ordinary tubes are only expanded in the holes. The stay tubes are shown black in Fig. 70.

To allow access to the inside of the boiler, for examining and cleaning, *manholes* and *mudholes* are provided. They are fitted with suitable doors which are securely bolted on, and jointed with rings of asbestos when the boiler is in use. The lower doors are usually made with their joints inside the boiler, so that if the bolts securing them were to break, the internal pressure would keep the doors in place.

Mild steel, made by the Siemens-Martin process (p. 17), having an ultimate tensile strength of 27 to 30 tons per sq. in., is now almost invariably used for all the plates, stays, etc., used in boiler construction. A test piece is cut from each plate used, which has to break between these limits, and to stretch 20 per cent in a length of 8 inches before breaking. Other tests are also made to ensure perfectly sound and suitable plates being used.

Water-Pressure Test.—Before steam is raised in a modern Admiralty boiler, it is always tested by water pressure to 90 lbs. above the designed working pressure to ensure its strength, and to detect any leaks in the joints. Boilers of mail steamers are tested to double the working pressure. For example, the boilers of the Cunarder *Saxonia* are made to carry a working pressure of 210 lbs., and a test pressure of 420 lbs.

Digitized by Google

The thicknesses of plates of the various parts of large marine boilers are about as follows:—Shell, 1 in. to $1\frac{1}{4}$ in. Front, $\frac{3}{4}$ in. to $\frac{7}{8}$ in. Back, $\frac{5}{8}$ to $\frac{3}{4}$ in. Furnace $\frac{1}{2}$ in. to $\frac{5}{8}$ in. Combustion chamber, $\frac{1}{2}$ in. Tube plate, $\frac{3}{4}$ in. to $\frac{7}{8}$ in.

After boilers are fixed in their places in the ship, the *smoke boxes*, into which the tubes discharge the smoke and gases which pass through them, are bolted on to the boiler fronts, over the ends of the tubes.

The upper parts of the *smoke boxes* lead into the *uptakes*, and these again lead into the *funnels*.

A *damper* is usually fitted in some parts of the uptake. It consists of a flat plate worked by means of a lever outside; when in a horizontal position the plate blocks up the uptake; when vertical, the smoke, etc., can pass freely up on either side of it. In new ships of the Royal Navy each furnace, or pair of furnaces, has its own uptake and damper, so that the fires can be cleaned separately and tubes swept without interfering with the draught of the others.

An *air casing* is fitted over the smoke boxes, uptakes, and lower parts of funnels: this is made of thin steel plates, and is arranged so that a current of air can pass between it and the heated surfaces. By this means undue heat is prevented from reaching anything near the heated surfaces, and the temperature of the stokehold, etc., is kept lower than it otherwise would be.

Lagging.—All the exterior parts of a boiler are clothed where practicable with some good non-conducting and non-inflammable material, to prevent loss of heat by *radiation*. This is called *lagging;* it is made of asbestos, silicate cotton (made from the slag of blast furnaces), etc., which is again covered with thin sheet iron or steel, to keep it in place.

In some cases a modification of the cylindrical form of boiler is used. The top and bottom of the shell are made semicircular, but the sides are flat; in this case stays are fitted across the boiler from side to side to support the flat surfaces.

Digitized by Google

LESSON XIV

Boilers (*continued*).—"Double-ended return tube" boiler. Sketch (section through furnace, etc.) of "Through tube" boiler. "Locomotive" boiler, *fusible plug*. Tubulous boilers. Preservation of boilers.

The *double-ended boiler* consists practically of two "return tube" boilers placed back to back. By this arrangement considerable saving of weight and space is effected, as no backs are required. In some cases one combustion chamber serves for both sets of furnaces, so the weight of the back plates of combustion chamber with their stays is saved. Another advantage gained by this arrangement is that more efficient and complete combustion is obtained by having a more roomy combustion chamber. In many new ships each furnace, or pair of furnaces, has its own combustion chamber, as experience has shown this to be the better plan. (*See Frontispiece.*)

We will now describe the "Through tube" boiler; that shown in sketches on page 156 is 10 feet in diameter and 18½ feet long.

The parts of this type of boiler are the same as those of the "return tube" boiler, but are arranged differently. As the name denotes, the tubes, instead of *returning* over the furnaces to the front of the boiler, are continued from the combustion chamber *through* the boiler. This class of boiler is often used in ships with small draught of water, as owing to the different arrangement of parts it may be made less in diameter though longer.

Digitized by Google

Digitized by Google

"Through Tube" Marine Boiler.

Scale $\frac{1}{4}$ *inch* = 1 *foot.*

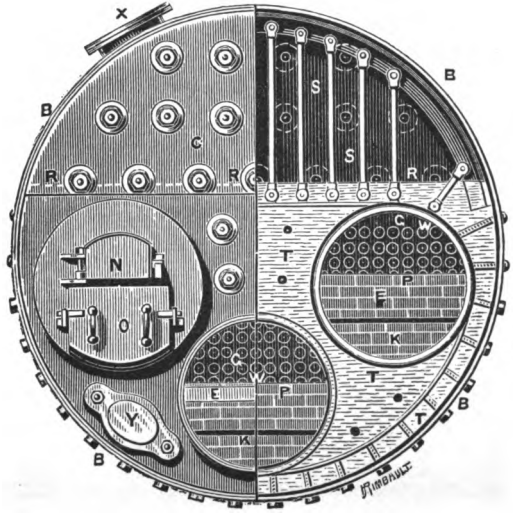

Fig. 72.

Front View, with Section across Furnaces, etc.

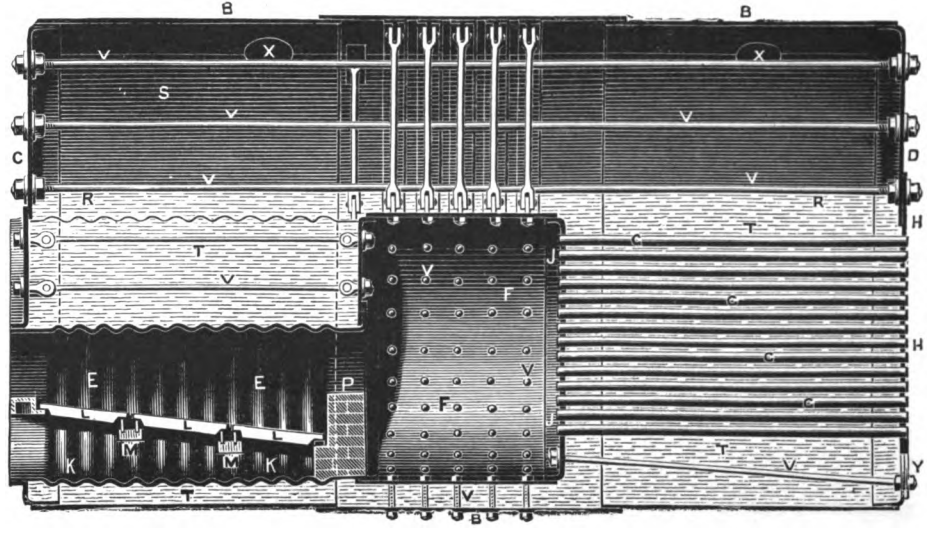

Fig. 73.

Section through Furnace, etc.

Digitized by Google

The back of the combustion chamber forms one of the tube plates, the other tube plate being at the back of the boiler.

The top of the combustion chamber of the boiler shown is supported by stays fastened to T steels at the top of the boiler. With the above exceptions the description of parts of the "return tube" boiler will serve for this type also. The letters refer to corresponding parts in the sketches of both types.

Referring to Figs. 72 and 73,

B, represents the *shell.*
C, *Front* of boiler.
D, *Back.*
E, *Furnaces.*
F, *Combustion chamber.*
G, *Tubes.*
H, *Back tube plate.*
J, *Front tube plate.*
K, *Ash pit.*
L, *Furnace bars.*
M, *Bearing bars.*
N, *Furnace door.*
O, *Ash-pit door* or *draught plate.*
P, *Bridge.*
R, *Water line.*
S, *Steam space.*
T, *Water space.*
V, *Stays.*
W, *Stay tubes.*
X, *Manholes.*
Y, *Mudholes.*

The *locomotive* type of boiler is a familiar one. It is in reality a "through tube" boiler, in which the furnaces and combustion chamber are in one. These are fitted to torpedo-boats and other small vessels.

The advantage of this type of boiler is that it is capable of generating more steam in proportion to its weight.

The crown or top of the combustion chamber is in some cases fitted with one or more *fusible plugs.* They are made of brass, and screwed into the mild steel plate. Through the centre of the brass runs a small hole plugged up with lead or some fusible alloy. Should the water in the boiler become so low as to expose the crown of the combustion chamber, the heat from the furnaces melts the lead, the steam rushes in and puts out the fires, when, of course, no further damage can be done to the plates.

Tubulous Boilers or water-tube boilers are those in which steam is generated from water contained in tubes surrounded by flame and hot gases. These are called water-tube boilers

Digitized by Google

as compared with those just described, which are fire-tube or tank boilers.

The Admiralty Committee on modern boilers (1900) report that, in their opinion, the advantages of water-tube boilers for naval purposes are so great, chiefly from the military point of view, that, provided a satisfactory type of water-tube boiler be adopted, it would be more suitable for use in H.M. Navy than the cylindrical type of boiler.

The main principles involved in different systems of water-tube boilers will be briefly described, since various types are in use in H.M. ships.

They may be divided into two classes: large tube and small tube boilers; the large tubes, about 4 inches internal diameter, being used in the boilers of battleships and large cruisers; the small tubes, about $1\frac{1}{8}$ inch internal diameter, for smaller cruisers, torpedo-boats, and destroyers.

They may also be classed according to the circulation of the water in the boiler. One only, the Belleville boiler, *restricts* the circulation of the water; in all other types the water is free to flow with the bubbles of steam towards the steam container. Though here, again, while the water in large tube boilers is *free* to circulate with the steam, and does so to a certain extent, the circulation of water in small tube boilers is completely controlled by the upward flow of steam. For example, in Thornycroft's small tube boiler a mixture of steam and water is discharged from the top of the tubes in the proportion of one part of steam to two of water, so that the circulation of the water is *accelerated.*

Hence water-tube boilers are also classed as of restricted, free, or accelerated circulation.

Brief Description of "Belleville" Boiler.—The Belleville boiler, illustrated in Fig. 74, consists of a series of sets of tubes placed side by side over the fire, and enclosed in a casing formed of non-conducting material. Each set of tubes, called an *element*, is constructed in the form of a flattened spiral, and

Digitized by Google

Digitized by Google

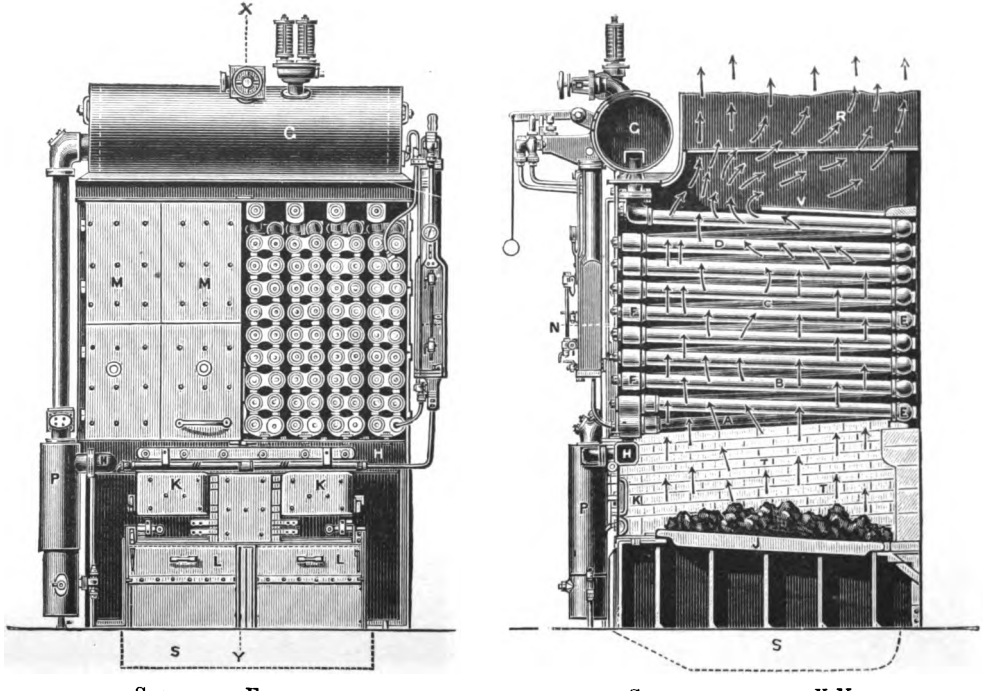

SECTIONAL ELEVATION. SECTION THROUGH X Y.

FIG. 74.—BELLEVILLE BOILER.

Digitized by Google

consists of a number of straight tubes A, B, C, D, etc., screwed at the ends and connected to *junction boxes* E, F; the junction boxes at both ends of the elements are placed vertically over each other, and are so constructed that the upper end of one tube is on the same level as the lower end of the next tube in the spiral. The junction boxes E are closed at the ends, but those marked F at the front end of the boiler are fitted with small doors, so that the interior of each tube may be readily inspected. The tubes in the Belleville boilers fitted to H.M.S. *Terrible* are 6 feet 9 inches long; there are ten pairs of tubes forming ten turns of the flattened spiral to each element; and of her forty-eight boilers, twenty-four are fitted with eight elements (as shown in the sketch), the other twenty-four having seven elements. The tubes are $4\frac{1}{2}$ inches external diameter, and of thicknesses varying from $\frac{3}{8}$ inch for bottom rows to $\frac{1}{4}$ inch for middle, and $\frac{3}{16}$ inch for upper rows; the spaces between the tubes are from 1 to $1\frac{1}{4}$ inch. These forty-eight boilers are designed to supply steam for 25,000 I.H.P. without forced draught.

The lower front box of each element is connected to a horizontal cross tube at the front of the boiler, called the *feed collecting tube* H, and the front upper box is connected to the bottom of the *steam receiver* G, which is a horizontal cylinder running along the front of the boiler above the casing.

The furnace bars J, and furnaces T, with fire brick sides and back, are arranged under the elements as shown in sketch; the hot gases pass up between the tubes to the uptake R and funnel. Furnace doors K and draught plates L are fitted as in ordinary boilers. The smoke-box doors M are arranged over the ends of the tubes at the front of the boiler; these can be removed when necessary to clean or examine the tubes, and are opened for the purpose of checking the combustion and consequent generation of steam when necessary. Ashes falling through the furnace bars are collected in the *ash pans* S.

In order to secure complete combustion in the furnaces

Digitized by Google

before the gases rise between the tubes, jets of air under pressure are delivered from a pipe led along the front of the boiler above the furnace doors; the amount of air admitted through this pipe may be varied as necessary to suit the rate of combustion or the kind of coal used. Baffle plates, as shown at V, are fitted horizontally between the tubes, to ensure the thorough circulation of the hot gases around them.

When the boiler is in use, the water level N is at about half the height of the elements; water is supplied at the bottom of each element, is partially evaporated in the lowest tube, the steam formed passing through the water by the back junction box into the next tube, where further evaporation takes place, and so on. Each tube has, therefore, to convey all the steam formed in the tubes of the same element which are below it as well as the steam formed within itself. Steam mixed with water is thus continuously discharged from each element into the receiver G.

The water from the feed pumps is admitted to one end of this receiver, where it mixes with the water from the tubes, passes with it to the other end of the receiver, thence by an outside circulating pipe to the collecting tube, and so to the bottoms of the elements. An arrangement is made by means of a *sediment chamber* P in connection with the pipe leading from the steam receiver to the elements, to separate impurities from the boiler water; from this they can be blown overboard as necessary. Self-regulating feed-supply arrangements are provided for these boilers to keep the water at the proper height. The steam receiver is fitted with the usual stop and safety valves, pressure gauges, etc.; the water gauge is shown at N.

As a very small amount of water is used in these boilers compared to that in the ordinary boilers there is more fluctuation in the pressure of steam, and arrangements are made to keep the pressure supplied to the engines constant. This is done by keeping the pressure of steam in the boilers above that required for the engines, the supply to which is regulated

Digitized by Google

Digitized by Google

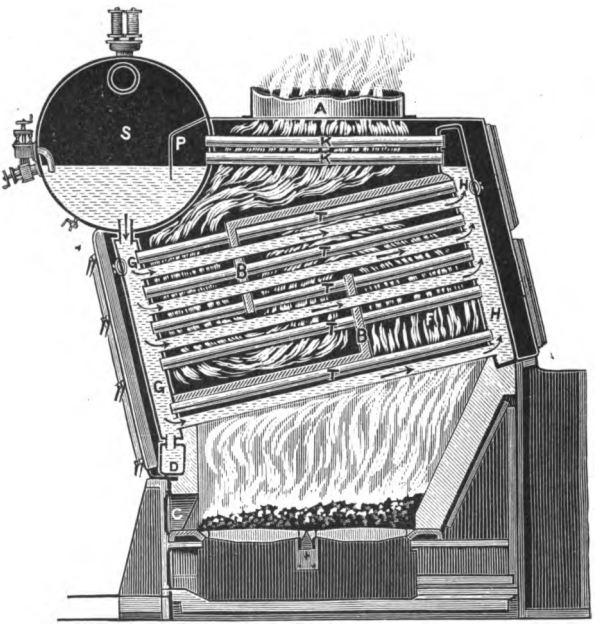

SECTIONAL ELEVATION.

FIG. 75.—BABCOCK AND WILCOX BOILER.

Digitized by Google

by an automatic reducing valve (not shown in sketch) so constructed that a constant pressure reaches the engines however much the pressure in the boilers may vary. If the pressure in the boilers should fall below that at which the reducing valve is set, it would open fully and allow the whole of the boiler pressure to pass to the engines.

"Babcock and Wilcox" Boiler.—Many boilers have been designed in which straight tubes connecting flat water-spaces are introduced into the furnace. It is sufficient to mention the names of Joessel (1869), Penelle (1874), and D'Allest (1888) as the designers of boilers on this plan. The water-tubes are inclined to the horizontal, and at right angles to the flat water-spaces; a drum is provided into which the water-spaces open, and in which the working level of the water is maintained. The circulation of the water is then free.

The firm of Babcock and Wilcox have for many years built land boilers on this plan. Their marine boiler (Fig. 75) is the outcome of their experience. The flat water-spaces have been replaced by rectangular headers G, H of wrought steel, sinuous in form, and the tubes are expanded into them with an ordinary boiler-tube expander. The tubes T, T are inclined to the horizontal and the headers to the vertical at an angle of 15°, and the tubes are staggered or placed zig-zag instead of directly above one another, so as to break up the current of flame and hot gases. Baffle plates B, B between the tubes direct the products of combustion so that they traverse the tubes three times before going up the funnel A.

The horizontal steam and water drum S is placed above the downtake headers G and connected to them by short tubes. The uptake headers H are connected with S by horizontal tubes K, K leading into it above the water line; the diaphragm P in the steam drum acts as a separator. F is a combustion chamber.

The mud-drum D extending the whole width of the boiler is connected by short tubes with the bottom of each downtake header.

Digitized by Google

Handholes are provided in the headers opposite the end of each tube and closed by a forged steel plate. The destroyer *Sheldrake* was fitted with this boiler as a pioneer.

The "Niclausse" Boiler.—The Niclausse boiler illustrated in Fig. 76 consists of double tubes opening into double headers. From outside, the staggered or sinuous headers look like those of a Babcock and Wilcox boiler, but they are divided by a diaphragm into a downtake and an uptake part. An inside tube D of thin sheet metal takes the water from the front or downcast header G to the end of the solid drawn steel tubes E which form the heating surface, and these outer tubes discharge the steam and water into the upcast header H.

The downtake headers take the water from the steam and water drum S, and the uptake headers discharge steam and water into the drum. Baffle plates P are introduced to keep the ascending water and steam separate from the descending water. The feed is admitted to the steam and water drum in which the working level of the water is maintained.

The "lantern" end of the outer tube should be noticed; the large openings C, D are shown sideways in the sketch of tube. But they really open vertically so as to form little obstruction to the descent of the water in the downtake header G, and the opening L in the same way allows clearance for the rising steam and water in H, though here the inner tube D forms an obstruction.

It should be noticed that each outer tube is perfectly free, its end resting loosely in the plate L, so that it can easily be taken out; the inner tube is carried by slight stays, which are seen in the opening C, and is supported by the feathers at the end.

The outer tubes are about 7 feet in length and $3\frac{1}{4}$ in external diameter. These tubes are thickened at A and B, and turned slightly conical to fit into the holes in the header. There is practically no pressure tending to blow the tube out of the header, so that a crossbar F and nut is sufficient to keep them in place; one to each pair of tubes.

Digitized by Google

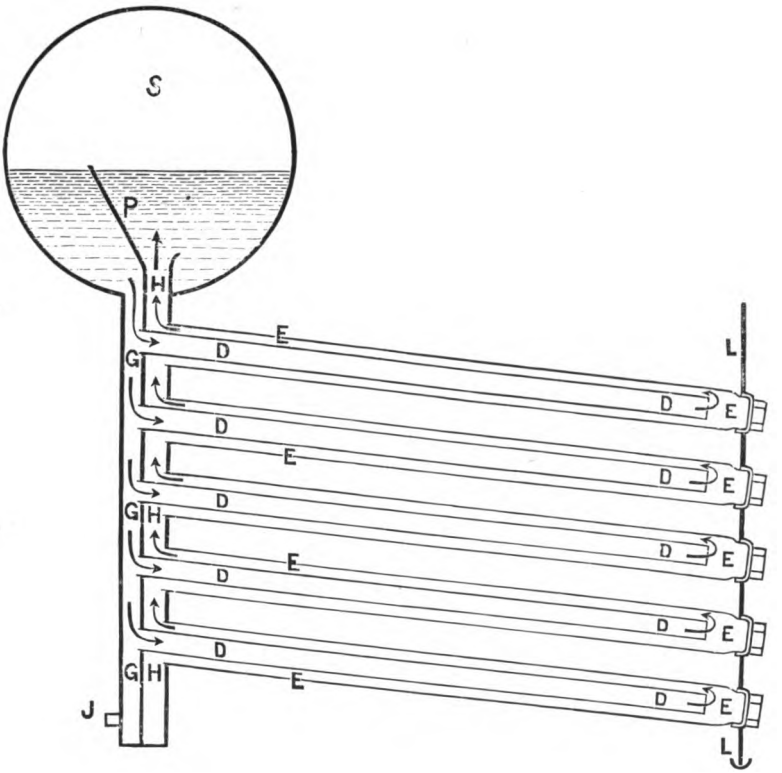

SECTIONAL ELEVATION (OUTLINE SKETCH).

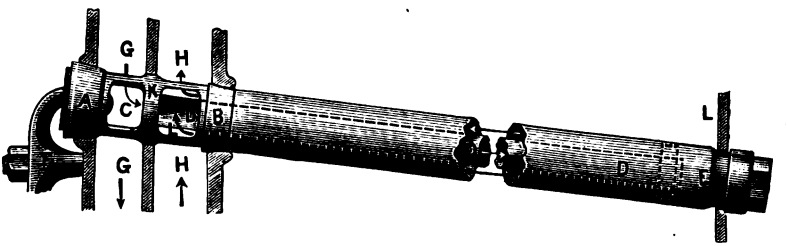

SKETCH OF TUBE.

FIG. 76.—NICLAUSSE BOILER.

Digitized by Google

Digitized by Google

Digitized by Google

Digitized by Google

Digitized by Google

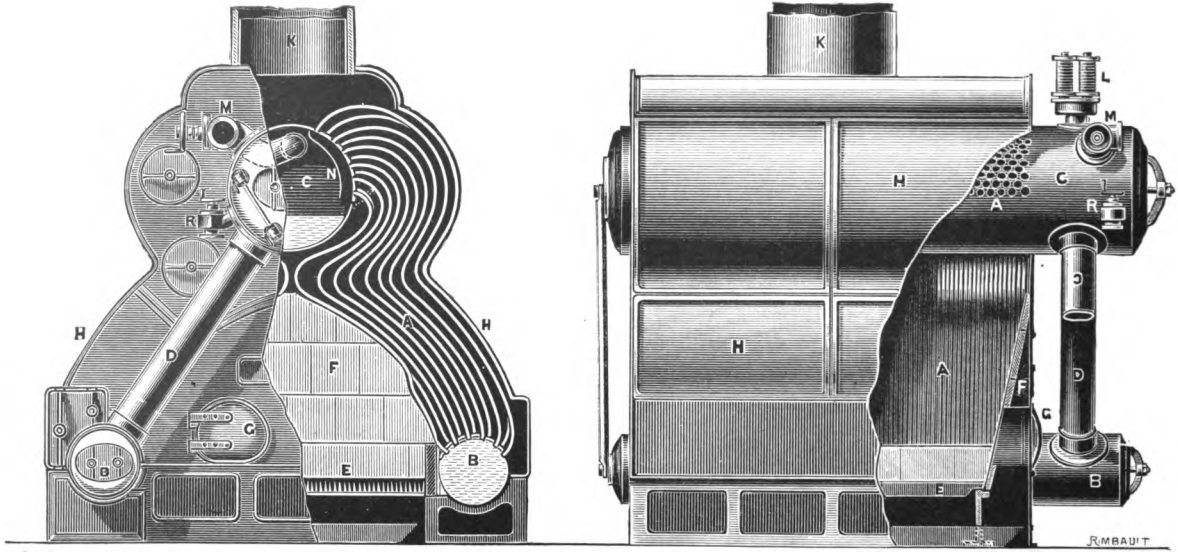

FRONT VIEW AND SECTION. SIDE VIEW AND SECTION.

SECTIONAL ELEVATIONS.

FIG. 77.—THORNYCROFT BOILER, "SPEEDY" TYPE.

Digitized by Google

The thickening at K is made an easy fit in the hole made in the vertical diaphragm, which divides the header into two parts, leakage being of no importance. The headers can be blown off at J.

The destroyer *Seagull* was fitted with Niclausse boilers, and in consequence of the success of the experiment, the 1st class cruisers *Berwick* and *Suffolk* were fitted with them.

Short Description of "Thornycroft" Boiler.—The Thornycroft boiler as fitted to H.M.S. *Speedy* is illustrated in Fig. 77. It consists of a series of bent tubes A, the lower ends of which are secured to the *water chambers* B, and the upper ends to the *steam chest* or *chamber* C; the steam and water chambers are connected by *downcast tubes* D; the furnace bars are shown at E, the furnace doors at G. The tubes, which are of steel about $1\frac{1}{4}$ inch outside and $1\frac{1}{16}$ inch inside diameter, are arranged on both sides of the furnace, the inner rows nearly meeting over the middle, as shown; the back, front, and lower parts of the furnace are lined with fire bricks F, or other non-conducting substances.

The two inner rows of tubes are spaced closely together at a little distance from the fire level, and form a water diaphragm or crown to the furnace, causing the gases to leave the furnace at the spaces left near the bottoms of these tubes. The two outer rows are also spaced closely together to confine the heat between the tubes and keep it from the boiler casing H. The furnace gases pass out between the upper ends of the tubes and escape to the funnel through the opening K.

When the boiler is under steam, the feed water enters the steam chamber through the valve R; it goes down through the circulating downcast pipes into the water chambers, passes into the tubes, where it is heated and partially converted into steam. The steam bubbles with the water go up into the steam chamber in which the diaphragm N is fitted; this leads the water from the ends of the tubes to the bottom of the chamber; while the steam passing round it rises to the top. The water goes

Digitized by Google

down again through the downcast pipes to the water chambers, and a circulation is thus maintained. The steam-chest is fitted with a stop valve M, with an internal steam pipe, a safety valve L, glass water gauges, etc.

This type of boiler is fitted to cruisers such as H.M.S. *Proserpine*, to develop 7000 I.H.P.

The "Daring" type of Thornycroft boiler is illustrated in Fig. 78. The feed water is supplied to the steam and water drum C by the automatic apparatus R, and descends by the downcast tubes D, D to the water chamber B, which communicates by the pipe O with the two wing chambers W, W.

These three water chambers are joined by small pipes A, A with the drum C, forming a "tube wall" to the furnace, and as these pipes are placed over the furnace, the steam is rapidly generated in them, and rushes with the water into the steam and water drum or "separator" C. Baffle plates N, N intercept the water.

In the side elevation, on the bottom left, the tubes A are seen coming out of the water chamber B; in the middle B is seen in section, and on the right the tubes are seen coming out of the wing chamber W above the furnace bricking F. The "tube wall" is seen on the middle right, and the downcast tubes D in the centre.

Notes on other Types.—Messrs. Thornycroft have a large tube boiler with a flat, vertical water-space, from which straight tubes in the shape of > project into the furnace and form the heating surface. The circulation in each > is upward, the steam formed being delivered into a steam and water drum. In the Yarrow type of boiler the general arrangement is the same as in the Thornycroft, but the tubes are straight; there are no downcast pipes; the whole circulation takes place in the ordinary tubes.

The advantages claimed for water-tube boilers over the ordinary marine types are:—

Digitized by Google

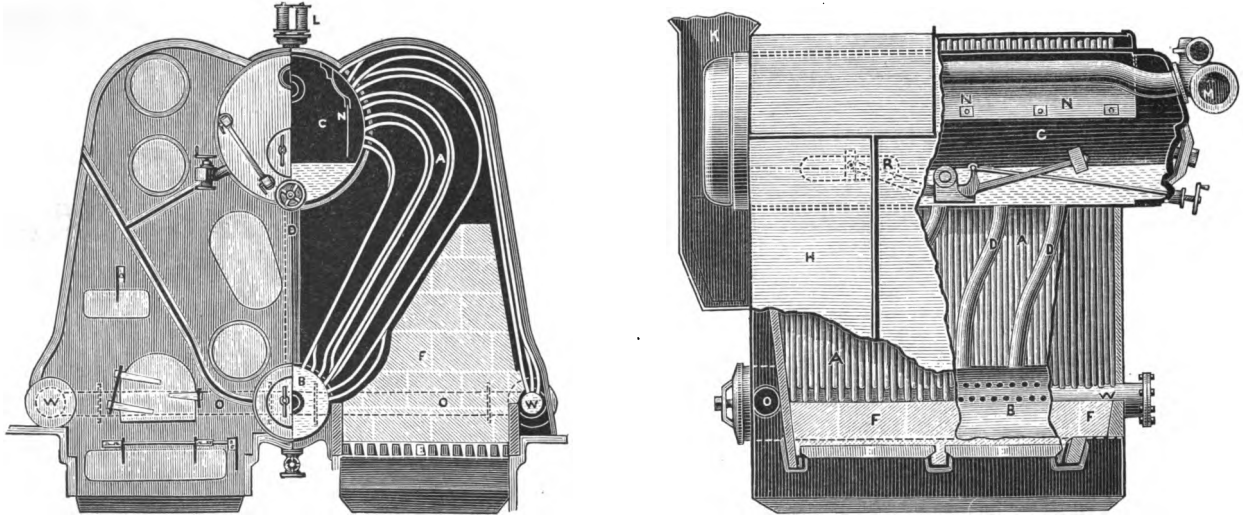

FRONT VIEW AND SECTION. SIDE VIEW AND VARIOUS SECTIONS.

SECTIONAL ELEVATIONS.

FIG. 78.—THORNYCROFT BOILER, "DARING" TYPE.

Digitized by Google

Digitized by Google

1. That they may be safely worked at much higher pressures than cylindrical boilers, with a view to greater economy of coal.

2. They are much lighter than the cylindrical boiler of the same power, chiefly because they contain so much less water.

3. Some types (such as the Thornycroft, etc.) are capable of much more severe forcing either continuously or on emergency than cylindrical boilers. Under these conditions, therefore, in proportion to their power they are *very much* lighter and occupy less space than ordinary boilers. In fact, without water-tube boilers the modern torpedo-boat destroyer would have been impossible.

4. They are much more easily repaired or replaced than ordinary boilers. A damaged element of a Belleville boiler can be replaced by a spare one in a few hours, while a whole set of boilers could be replaced without cutting up decks, etc., as necessary for ordinary boilers.

5. In the event of accident to, or fracture of any part of a water-tube boiler, there would be much less risk either to life or disablement of ship owing to the small amount of water used. Thus the weight of water at working height in one of H.M.S. *Terrible's* boilers is little over one ton, while with the ordinary return tube boiler, as fitted to battleships, the weight of water per boiler is over twenty tons.

Note.—If a boiler having steam up in it of high pressure be damaged so that the steam and water it contains can escape freely, the water being at the temperature due to the pressure will turn into steam at atmospheric pressure as it escapes; so that the volume of steam from twenty tons of water would be enormous.

The principal disadvantages of these boilers are:—

1. The increased difficulty of keeping the tubes clean; with some types of boilers the inside of the tubes are inaccessible, so that the only way to examine them is to cut tubes out.

2. There is a difficulty with some types of boilers of finding

Digitized by Google

and repairing a leaky tube; the tubes and tube ends are so close together that it is difficult to localise a leak.

3. Owing to the small amount of water in these boilers and the rapid evaporation, it is difficult in some cases to ensure a regular and sufficient supply of feed water. This difficulty is got over in the Belleville, Thornycroft, and some other types of boiler by systems of automatic feed, but these require great attention to keep them in working order.

Preservation of Boilers.—(This article is inserted here for convenience, but will be better understood after reading the articles on density and surface condensation.)

Before surface condensers were fitted in steam-ships, the boilers were fed with salt water, and a large amount of the impurities in it were deposited on the furnaces, tubes, and other internal parts. These deposits being non-conductors of heat a great waste of heat was caused, and the plates of the furnaces and the tubes, etc., were frequently damaged by overheating. A great deal of time was also taken up in removing the scale from boilers, which became necessary after a few days' steaming. Since boilers have been supplied with fresh water feed by means of the surface condenser, and waste made up with water from reserve tanks or evaporators, their durability has been greatly increased.

When surface condensers, having brass tubes, were first introduced, it was found that there was a rapid wasting of the plates and stays of the boilers due to galvanic action. The tubes of the boilers also were made of brass; they are now made of steel. The destructive effects of galvanic action have been stopped by fitting a number of zinc slabs in metallic connection with the internal parts of the boiler (p. 22); also by taking care that the water in the boilers is never in the least degree acid.

When boilers are not being used they are preserved from decay in various ways according to which is most suitable. They are either kept quite full of water; or kept quite empty

Digitized by Google

and closed, all oxygen in the air inside them being consumed by means of burning charcoal put in when closed; or by other methods.

During recent years there has been trouble experienced with boilers owing to the oil used for internal lubrication of the machinery passing over with the feed water and forming deposits on the heating surfaces. Coal- and other filters are now used, through which the feed water has to pass on its way to the boilers, and the passage of oil is arrested.

Boilers now last much longer than formerly, owing to prevention of scale and overheating; to the use of zinc plates and prevention of galvanic action; to special care when not in use, and to prevention of oil deposits on heating surfaces.

Digitized by Google

LESSON XV

Combustion.—Composition of coal; definition of combustion; supply of air necessary; how obtained, *natural draught, steam blast, forced draught, air-pressure gauge, funnel exhaust,* boiler tube *ferrules*; description of *laying* and *lighting fires.*

The fuel generally used in ocean steam-ships is Welsh steam coal, the principal constituents of which are *Carbon* and *Hydrogen.* About 80 per cent is *carbon,* which appears as coke after the gases are driven out of the coal during the process of combustion.

About 12 per cent consists of mixtures of *carbon* and *hydrogen,* called *Hydrocarbons:* these are principally inflammable gases, such as are used for lighting purposes.

The remaining 8 per cent consists of earthy substances and other impurities.

Combustion of Coal.—Combustion is a rapid chemical combination of the oxygen of the air with the hydrogen and carbon of the coal, light and heat being evolved.

There are two stages in the combustion of coal:—

I. When coal is first thrown on the fire, it absorbs heat, and the hydrocarbons are driven off; if there be enough air, and the temperature of the mixture of the air with the gases is high enough, these are burnt in the furnace and combustion chamber. If not, they go off in the form of smoke, and the heat which would be gained by their combustion is lost.

II. The solid portion of the coal, the carbon or coke, then remains to be burnt. The air for this purpose passes through

Digitized by Google

the spaces between the furnace bars; the supply into the ash pits being regulated by the draught plates.

If sufficient air is supplied, the combustion of the coke is complete, and the product of combustion, *carbonic acid gas*, passes away into the uptake and funnel.

But if the supply of air is insufficient, or the fire is thick, the *carbonic acid* (*one part carbon, and two parts oxygen*) loses one part of oxygen in combination with the glowing carbon, and passes from the fire in the form of *carbonic oxide* (*one part carbon and one part oxygen*). As this gas will burn and give out heat by combination with another part of oxygen, it would be a waste of heat to allow it to pass unconsumed into the funnel. The air which passes through the gratings in the furnace doors affords oxygen for the combustion of this gas, as well as for the hydrocarbons in the combustion chamber.

To effect the complete combustion of 1 lb. of coal, 12 lbs. of air are necessary, theoretically.

In practice this has to be exceeded: with *artificial draught* 18 lbs. are necessary, and with *natural draught* (that is draught due to the height of the funnel alone) 24 lbs. This would occupy a volume 16,000 times as great as 1 lb. of coal.

Supply of Air: Natural Draught.—In ordinary cases this supply of air is kept up by the *natural draught.* The heated gases in the uptake and funnel being lighter than the air outside, ascend, and to supply their place fresh air is drawn through the furnaces. About one-fourth the heat produced in the furnaces is expended in this way; the temperature of the gases in the funnel is about 600° Fahr., and in the furnaces about 2400° Fahr.

Steam Blast.—The natural draught does not always cause enough air to pass through the fires, and the supply may be increased by the *steam blast.* A jet of steam may be directed up the funnel; this causes the gases in it to ascend more rapidly, and the supply of air to take their place is, consequently, increased. This is a very wasteful way of obtaining heat, and is now seldom, if ever, used.

Digitized by Google

Forced Draught.—In many modern ships and in torpedo-boats, the supply of air to the furnaces can be increased by *forced draught.*

This may be done in three ways :—

I. Closing all openings in the stokehold, except the furnaces, and forcing air down by means of fans driven by special engines.

II. Closing the ash pits only, and pumping air into them in a similar manner.

III. Fitting a fan in the base of the funnel and *drawing* the air through the furnaces. This method is called *induced* draught.

The first method is employed in all the modern ships of the Royal Navy. The increased pressure of air is measured by the *water-pressure gauge,* which consists of a bent glass tube enclosed in a case. Referring to Fig. 79, A is a glass tube open at the end B to the stokehold and at the end C to the open air. Coloured water is put into the tube, and when there is no additional pressure of air the water is level in both ends. When there is a pressure in the stokehold, the water is forced down the end B and rises in C. To measure the amount of pressure, the zero of the sliding scale D is set at the level of the water in B, and the height the water rises in C can be read off on D in inches and fractions of an inch. A similar gauge is fitted in the engine room, so that the pressure of air in the stokehold may be known there. In this case an air pipe from the stokehold is led to the closed end of the tube, and the other end is open to the engine room ; the scale is used in the same way as before described.

This pressure causes air to rush rapidly into the furnaces: a much quicker combustion of coal results, with a corresponding increase in the generation of steam, revolution of engines, and speed of ship.

In some ships the power developed when under forced draught exceeds that under natural draught by 70 per cent. This is evidently of great advantage, for with the same weight of boilers greatly increased power can be obtained. Another advantage, especially in hot climates, is that a ready means is

Digitized by Google

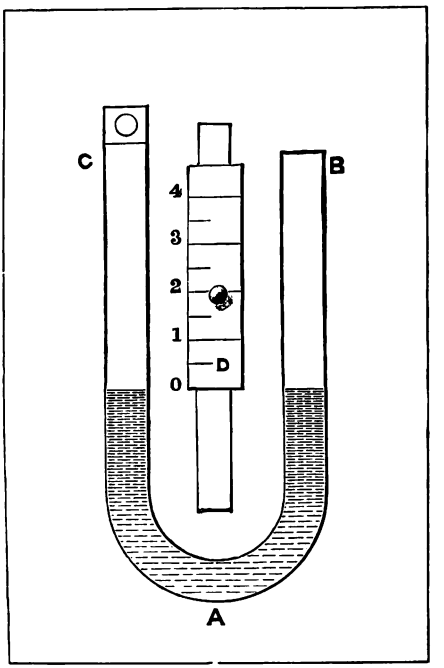

FIG. 79.—METHOD OF MEASURING FORCED DRAUGHT. (Page 180.)

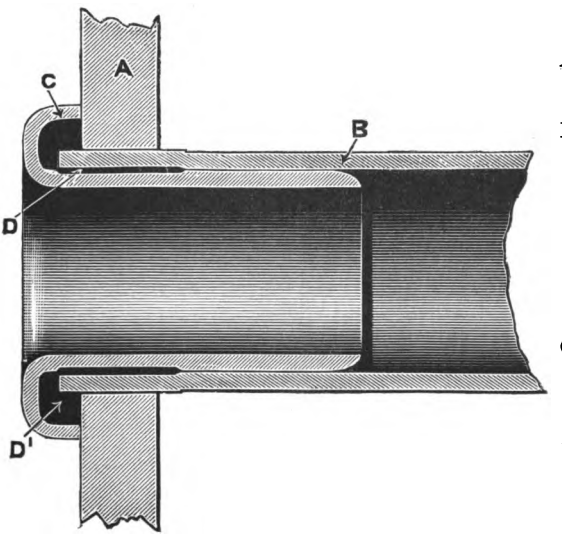

A. Tube plate (combustion chamber end).

B. Tube (which fits tightly in the tube plate originally, and is afterwards expanded outwards against the tube plate by a special tool called a "tube expander").

C. Ferrule (which, at its inner end, fits tightly in the tube).

D D'. Air space between ferrule and tube.

FIG. 80.—BOILER TUBE FERRULE (*new pattern*). (Page 183.)

Digitized by Google

Digitized by Google

at hand for ensuring a good supply of air to the stokehold under all conditions of the atmosphere.

The second system is much used in ships of the mercantile marine.

Funnel Exhaust.—In the older class of steam-boats the exhaust steam from the engines is led into the funnel as in a locomotive engine, and so a quick supply of air to the furnaces is maintained when the engines are working; but in the later boats, condensing engines of small size, and similar to those used on board ships, are fitted.

Advantage of Ferruling Tubes.—The boilers of the ships of the Royal Navy first fitted with forced draught gave an increased supply of steam with very satisfactory results; but in some of the later ships' boilers great difficulty has been experienced in keeping the tubes tight in the tube plate at the combustion chamber end.

The intense heat of the furnace generates steam so rapidly at the tube ends and tube plate inside the boiler, that there is a mixture of steam and water at that part; while on the outside, the tube ends are exposed to the highest temperature. Steam being in contact with the tube ends and tube plate, and being a non-conductor of heat, the parts named become heated far above the temperature of the boiling water.

If from any cause, such as admission of cold air when firing up, this temperature is lowered, the tube end contracts sufficiently in some cases to cause a considerable leakage of water at the joint.

Originally simple rings, called *ferrules*, of malleable cast iron or steel, about $1\frac{1}{4}$ in. long, were inserted in the tube ends and expanded against the tubes and tube plate, but these did not prevent the contraction before alluded to.

The Admiralty ferrule, shown in section in Fig. 80, is designed to obviate this; the idea being that the air space protects the tube end where it passes through the plate, and also a certain portion of the tube plate itself, so that water may be always in contact with the inner end of the tube and inside of tube plate; excessive heating being thus prevented.

Digitized by Google

LAYING AND LIGHTING FIRES.—Before starting make sure, by trying the glass water gauge (p. 190), that there is enough water in the boiler. The glass ought to be rather more than half full of water. Then throw a thin layer of coal all over the furnace bars; next place a piece of wood *across* the mouth of the furnace, just inside the door, and lay other pieces of wood *along* the furnace with their ends resting on the cross piece; the object of the latter being to tilt the wood and allow the air to get underneath it. Then pile up lumps of coal on the wood (which should extend about two feet inwards), until the mouth of the furnace is full up.

All is now ready for lighting up, and the fire is started when required with oily cotton waste, wood shavings, or any convenient inflammable material.

The furnace door is kept *open*, and the draught plate *closed* until the fire at the mouth of the furnace is well alight; this causes the flame to pass over and ignite the coal at the back. The fire is then *spread*, that is pushed back evenly over the furnace bars, the furnace door is closed, and the draught plate opened as necessary: more coal being added as required.

Steam is always raised very slowly in boilers, to ensure the water and the various parts of the boilers being heated uniformly, as enormous strains may be set up through unequal expansion, causing leakage of joints, tubes, etc., if this be not attended to.

Digitized by Google

LESSON XVI

Evaporation.—Latent heat of steam. Total heat of evaporation.

The heat produced by the combustion of coal in the furnaces is transmitted or *conducted* through the metal of the furnace crown and sides, combustion chamber and tubes, to the water in the boiler. The water nearest to the heated metal will then become hotter and ascend, its place being taken by the cooler water. This circulation conveys the heat to all the water in the boiler, and the water is said to be heated by *convection.* When the whole of the water has been raised to the boiling point, bubbles of steam form on the heating surfaces and ascend to the surface of the water.

Let us consider the case of water at 32° Fahr. being converted into steam at atmospheric pressure. Until the water has been raised to the boiling temperature 212° Fahr., the heat which has been added to it is *sensible;* that is, its amount can be measured by the thermometer. When the whole of the water has been raised to this temperature, it is still necessary to supply a large amount of heat to evaporate it or to convert the boiling water into steam. This quantity is approximately five and a half times that necessary to raise the water from freezing to boiling point. This does not produce any change in the temperature of the water, but is employed in producing internal changes in the molecules of water to cause it to pass from water into steam, and on account of its being apparently lost in this way, it is called *latent* or hidden.

Digitized by Google

Latent heat may be defined as *the amount of heat that must be added to a body in a given state to change it into another state without altering its temperature.*

The amount of heat communicated to bodies is measured by THERMAL UNITS. *The British thermal unit represents the amount of heat necessary to raise one pound of water at maximum density* (39° *Fahr.*) *through one degree Fahr.*

The *latent heat of evaporation*, or the *latent heat of steam*, is the amount of heat which must be added to each pound of water at the boiling point to change it into steam at the same temperature. At atmospheric pressure this is found to be 966 thermal units.

The *total heat of evaporation* at a given temperature is the amount of heat which is added to change water at freezing point (32° Fahr.) into steam at the given temperature.

It is the sum of the sensible and latent heats at that temperature.

FOR EXAMPLE:—The *sensible* heat necessary to raise 1 lb. of water from freezing to boiling point at atmospheric pressure is—

$$212 - 32 = 180 \text{ thermal units.}$$

The *latent* heat added to change the water at 212° into steam at atmospheric pressure is 966 thermal units; the *total heat* applied is therefore 1146 thermal units. Consequently we see that the *total heat of evaporation* at atmospheric pressure is 1146 thermal units.

The following table gives the sensible, latent, and total heats of evaporation, for 1 lb. of water, corresponding to various pressures:—

Temperature of boiling water.	Pressure in lbs. per sq. in.	Sensible heat in thermal units.	Latent heat in thermal units.	Total heat in thermal units.
212	15	180	966	1146
306	75	274	900	1174
339	120	307	876	1183
357	150	325	862	1187

Digitized by Google

It will be noticed that the rate of increase in the total heat of evaporation is very small in comparison with the increase in pressure. Thus at 60 lbs. above the atmospheric pressure, or at 75 lbs. *absolute pressure* (absolute pressure being obtained by adding 15 lbs., the usually assumed pressure of the atmosphere, to the pressure shown by gauge), the total heat of evaporation is 1174 thermal units, while at 150 lbs. it is 1187, so that by imparting only 13 additional units of heat to each pound of boiling water at 75 lbs., the pressure of steam is doubled.

Advantage is taken of this fact in modern marine engines by using high pressure steam and allowing it to expand. This will be spoken of later under the head of Expansion of Steam and Expansive Working.

Digitized by Google

LESSON XVII

Fittings of Boilers.—Description and uses of *internal steam pipe*, *stop valve* (sketch section of automatic stop valve), *auxiliary stop valve*, *safety valves* (sketch section), *glass water gauge* (sketch), *test cocks*, *Bourdon pressure gauge* (sketch), main and auxiliary *feed valves*, *automatic feed regulation*, *blow-out*, *scum*, or *blow-off valves*.

Density of water in boilers. Hydrometer.

The usual fittings of marine boilers are:—

Main stop valve.	Steam pressure gauges.
Auxiliary stop valve.	Main feed valve.
Safety valves.	Auxiliary feed valve.
Glass water gauges.	Blow-out valve.
Test cocks.	Brine valve.

The principal parts of these are made of gun metal, on account of its strength and toughness, and its not being liable to corrosion. We will consider each separately.

MAIN STOP VALVE.—The *main stop* or *communication* valve is fitted for the purpose of regulating the passage of steam from the boiler to the main steam pipe and engines. One is fitted to each boiler and is connected to the main steam pipe, so that any boiler, or all, may be placed in communication with, or shut off from, the engines as may be necessary.

The stop valves fitted to boilers of merchant vessels are usually similar to that shown in Fig. 59; but the stop valves of warships are so fitted, that in the event of a boiler being injured, and the steam escaping from it, its stop valve closes automatically, and so prevents steam from the other boilers

Digitized by Google

escaping through the injured one, and the ship from being totally disabled in consequence.

Referring to Fig. 81, the valve box B shown in section is bolted to the boiler front D, and connected to the *internal steam pipe* A, which is fitted along the highest part of the steam space. This pipe has a number of narrow slits, S, cut across the top of it, through which steam has to pass to get to the valve: this ensures steam being steadily collected from the whole of the steam space, and prevents possible *priming* (the technical name for the passage of water with the steam from the boilers to the engines) through steam rushing to one large opening and taking water with it. The total area through the slits for the passage of steam must be at least equal to the area of opening in valve.

The valve C has a spindle F on which a shoulder G is formed by making the spindle smaller. A hollow screw H passes over the small part of the spindle and works in a thread in the bridge K. When the screw H is turned by the wheel N so as to bear hard on the shoulder G, the valve is closed and no steam can pass; but if the screw be turned back, the pressure of steam on the boiler side of the valve will cause it to open and steam will flow through M to the main steam pipe.

Should, however, the boiler be injured, and the pressure of steam in it fall below that in the main steam pipe, the rush of steam from the steam pipe would immediately close the valve.

These automatic stop valves are always fitted so that the spindle is in a horizontal position, for then the weight of the valve has no effect in closing it. A small hand wheel O is fitted to the end of the spindle to enable the valve to be moved if necessary by hand, and a projection R is formed on the spindle so that the valve shall not open too far.

An *auxiliary stop valve*, also self-closing, is usually fitted to each boiler, to open communication with the auxiliary steam pipe. By this means steam can be supplied for working auxiliary engines, etc., independently of the main stop valve and steam pipe.

Digitized by Google

SAFETY VALVES.—The various parts of a boiler are designed to safely withstand a given working pressure, and it is imperative that this should not be materially exceeded. Safety valves are fitted to prevent any material increase in the working pressure.

Referring to Fig. 82, A is the safety valve box shown in section, which is bolted on or near the top of the boiler. In the bottom plate B there are circular openings which are fitted with valves C. The valves are kept in place by steel springs D which press on the top of them, the steam pressure acting on the bottom.

Each spring is adjusted to exert a pressure on its valve equal to the area of the valve in square inches, multiplied by the safe working pressure of the boiler in lbs. per sq. in. Until this pressure is reached, the valve remains closed; but should it be exceeded, the pressure of the steam under the valve overcomes the pressure of the spring, the valve lifts and steam escapes, until the safe pressure is again reached.

The waste steam from the valves is taken away through the opening G to the *waste steam pipe*, which usually leads up alongside the funnel into the open air.

Two safety valves at least are fitted to each boiler, so that in the event of one becoming inoperative, the other would still probably be efficient.

Lifting gear E is fitted so that each valve can be lifted *by hand* independently of the steam pressure in the boiler. This is tried occasionally to make sure the valves are not set fast. Care is taken to fit it so that it does not interfere with the valves being lifted automatically by the steam.

To prevent an accumulation of water in the safety valve box, a small opening F is made in it, and to this a *drain pipe* is attached, to lead the water away to the bilge or drain tank.

GLASS WATER GAUGE.—The *glass water gauge* is fitted so that the level of the water in the boiler may be accurately known. If the water were allowed to get below the combustion

Digitized by Google

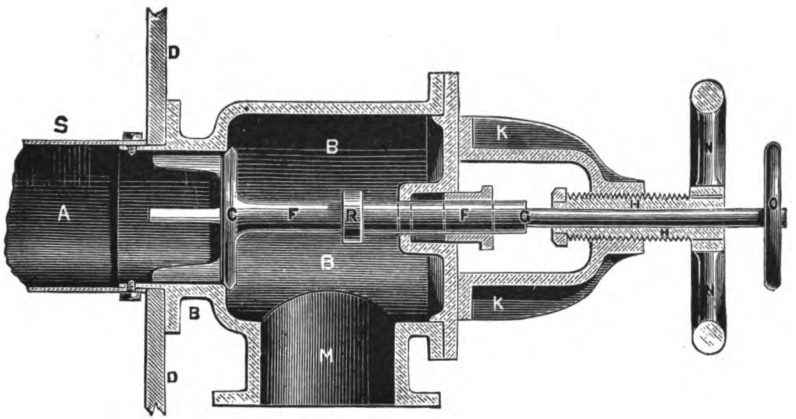

FIG. 81.—SELF-CLOSING STOP VALVE. (Page 189.)

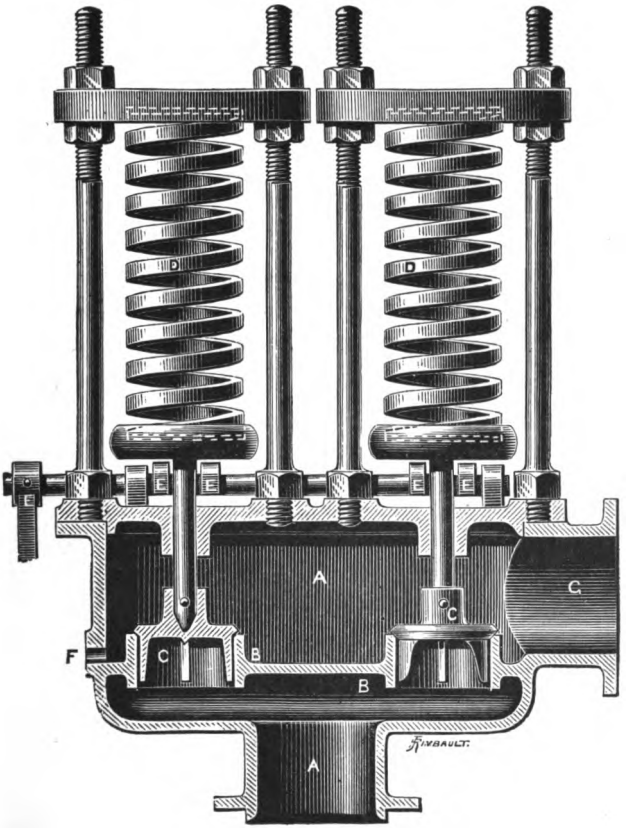

FIG. 82.—SAFETY VALVE. (Page 190.)

Digitized by Google

Digitized by Google

chamber or tubes they would quickly become red hot, and as iron or steel in that state is much weaker than at the ordinary temperature of boiling water, they would soon collapse under the steam pressure, probably with serious consequences.

On the other hand if the water were allowed to get too high in the boiler, it would come out of the stop valve with the steam, and probably do serious damage to the engines. So that it will be readily seen that it is very important that the proper level of the water should be known and maintained. As before stated, this level is usually about 9 inches above the top row of tubes.

Referring to Fig. 83, A is a cock in connection with the steam space, and B a cock in connection with the water space of the boiler. Their centres are usually from 15 to 18 inches apart. Outside the front of the boiler E, the two cocks are connected to a glass tube C, so that the water level F shown in the glass tube is the same as the level D inside the boiler. At the bottom of the glass a cock G is fitted, so that if B be closed and G opened, steam is blown through the glass; and if A be closed and B opened, water is blown through the glass; then G being again shut and A opened the water level will be again indicated. This is done occasionally with both steam and water cocks to make sure that both they and the glass tube are clear, and the correct water level showing. Two glass water gauges are often fitted to each boiler, so that one can always be used as a check to the other to ensure the height of water being accurately known; and in the event of one glass breaking the other gauge may be used till another glass can be fitted.

TEST COCKS are also fitted, one in the steam space and one in the water space, about a foot apart. They provide a rough means of telling the water level, should the glass water gauges get out of order. On opening the upper test cock, steam should come out, and on opening the lower one, water.

PRESSURE GAUGE.—The pressure of steam in the boiler is measured by lbs. to the square inch—thus when we say that a

Digitized by Google

boiler is working at 60 lbs. pressure, we mean that there is a pressure of 60 lbs. on each square inch of the surface in the boiler above the atmospheric pressure.

The *pressure gauge* is fitted to indicate the pressure in the boiler above the atmospheric pressure. That generally employed is *Bourdon's gauge.* Referring to Fig. 84, A is a cock in a small pipe connecting the gauge to the steam space in the boiler; B is a bent tube of elliptical section, as shown, one end of which is fixed to the cock and the other free to move. This free end works a sector D, pivoted at its centre, by means of the connecting link C. This sector gears into a pinion E, and E carries a pointer F which revolves with it.

When the steam pressure within the bent tube increases there is a tendency in the tube to straighten itself, owing to the elliptic form throughout the tube tending to become circular under internal pressure; this causes the sector to move, and the pointer to indicate the pressure on a scale which has been graduated beforehand from readings of a standard gauge under the same pressure as the gauge itself.

Two pressure gauges are often fitted to each boiler, one registering pressures up to a little over the working pressure of the boiler, and the other to something over double the working pressure. The latter may be used when testing the boiler by water pressure, and always serves as a check on the other gauge.

MAIN AND AUXILIARY FEED VALVES.—The *main feed valve* is the valve through which the main supply of feed water is admitted to the boiler while at work from the feed pumps, to take the place of the water evaporated. It usually consists of a valve like an ordinary stop valve, except that the valve itself is not connected with the spindle. The reason of this is that, supposing the pipe conveying the feed water to the boiler was broken, the valve would act as a non-return valve and close automatically, so that the boiling water would not be able to escape into the stokehold.

Digitized by Google

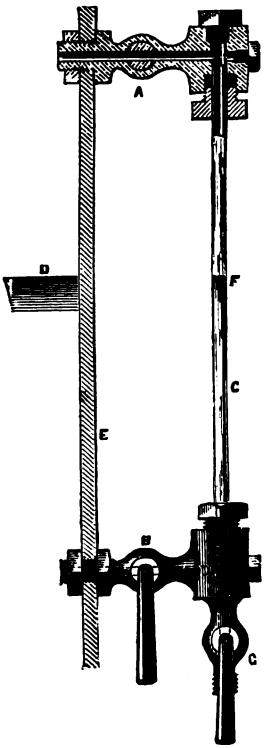

FIG. 83.
GLASS WATER GAUGE.
(Page 193.)

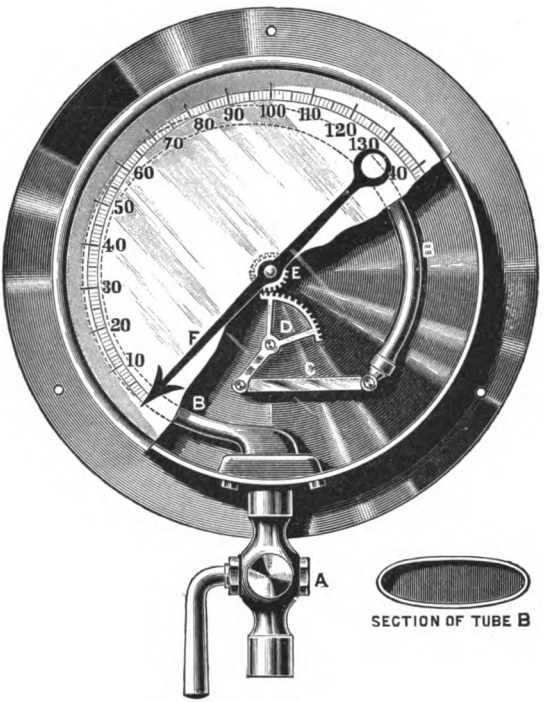

FIG. 84.
BOURDON'S PRESSURE GAUGE.
(Page 194.)

Digitized by Google

Digitized by Google

The *auxiliary feed valve* is an exactly similar valve, but connected to an auxiliary feed engine so that water may be pumped into the boiler independently of the main supply.

AUTOMATIC FEED REGULATION.—The small amount of water in tubulous boilers calls for constant attention to supply, as the water in an element may require to be replaced every ten minutes or so. Any delay or inadequacy in the feed-water supply will cause a dangerous lowering of the water level. This has attracted attention to Automatic Feed.

The obvious plan is to fit a float in the boiler or water chamber which will control the feed valve, allowing water to enter when the water level falls. The application of this plan is rendered difficult by the rapid circulation and ebullition in tubulous boilers, which render the water line indefinite. The Belleville and Thornycroft boilers are fitted with float automatic gear which works well. Yarrow has the ingenious device of taking steam for the donkey pump from the steam and water drum close to the water line so that the pump feeds until it takes water at the steam inlet. It then works as a hydraulic engine and more slowly. The exhaust from its cylinder is led into the condenser so that the pump is then engaged in slowly circulating feed water or emptying the boiler until the water is once more below the desired water line.

BLOW-OUT VALVE.—The *blow-out* or *blow-down* valve is fitted at the bottom of the boiler for the purpose of emptying it, by running the water into the reserve feed tanks or pumping it overboard.

BRINE, SCUM, OR BLOW-OFF VALVES.—As the feed and "make up" is now fresh water, the term brine valve has lost the meaning it had when sea water was used. Still the name "brine" or "blow-off" valve is occasionally applied to the scum valve which is fitted near the surface of the water in the

Digitized by Google

boiler to draw off scum and other impurities which collect near the water line.

Practically the only impurity present in the modern boiler comes from the oil used in the engines; this floats on the surface of the water, and can be partially got rid of by using the *brine* or *scum* valve. The opening for this is below the water level and *above the heating surface;* so, should the valve leak, and the water get below the opening, steam only would issue and the boiler remain safe.

Coal- and other filters are now employed, through which the feed water has to pass, and these remove the greater part of the oil before the water reaches the boilers.

DENSITY AND HYDROMETER.—It is necessary to have some method of measuring the density or amount of salt in the water in a boiler. This is done by means of an ordinary hydrometer. The hydrometer has a scale fitted to its stem marked 0, 1, 2, 3, etc. When floating in fresh water at a temperature of 200° Fahr., the mark 0 is at the surface of the water. When floating in ordinary sea water at 200° Fahr., the mark 1 will be at the surface. If in water with twice the percentage of salt, the mark 2 will be on the surface, and so on. 200° Fahr. is taken as the standard, because the water drawn from the boiler will be about that temperature.

The divisions 1, 2, 3, etc., may be further subdivided for convenience into tenths; thus 25 would represent $2\frac{1}{2}$ times the density of sea water.

Digitized by Google

LESSON XVIII

Main Steam Pipe, Expansion Joints (sketch section), **Separator** (sketch section).

MAIN STEAM PIPE.—The main steam pipe is made of suitable lengths of pipe fastened together by flanges and bolts, and conveys steam from the main stop valves to the engines.

Copper is usually employed for these pipes as it is not liable to corrode, but it has the disadvantage of becoming weaker as the temperature increases. In order to strengthen these pipes in modern ships with high pressures of steam and consequently high temperatures, they are, when over 6 inches in diameter, supported in some way; a common method in use is to wind them round with copper wire $\frac{3}{16}$ths of an inch in diameter, put on at a tension of 3600 lbs. per sq. in. Straight lengths only are used, the bends being of gun metal. Steam pipes of mild steel are now sometimes used instead of copper, the bends of these being also made of gun metal. It is usual to clothe all steam pipes with some non-conducting substance in the same way as boilers are covered; this is called lagging also.

EXPANSION JOINTS.—The difference in length of a long steam pipe when hot and when cold, due to expansion of the metal, is considerable, and to prevent an undue strain being thrown on the connections in consequence, *expansion joints* are fitted at intervals in it.

Referring to Fig. 85, A is a steam pipe to which is attached

Digitized by Google

a stuffing box B and gland C. Into B and C another length of the steam pipe D is fitted, in such a manner that it is free to move in and out for a certain distance, and yet remain steam-tight owing to the packing in the stuffing box. By this means the expansion and contraction of the steam pipe are allowed for, and no strain is thrown on any of the connections. An arrangement (not shown in the sketch) is usually fitted to prevent the possibility of the second length of pipe being drawn out of B.

SEPARATOR.—This is sometimes fitted at the end of the main steam pipe nearest to the engines as a means of getting rid of any water that may be mixed with the steam.

Referring to Fig. 86, A is the inlet from the boiler; the steam coming through it strikes against the dash plate B, and any water that may be with it is separated and falls into the space C at the bottom, the steam following the direction of the arrows and going out towards the engines through D. Should priming be going on, the water will accumulate in C, and show in the gauge glass E, which is exactly similar to the boiler gauge glass ; it is then blown out through the valve F.

Separators are also fitted in some cases to auxiliary engines to prevent water which may have collected in the pipes by steam condensing from being taken into the cylinders.

Digitized by Google

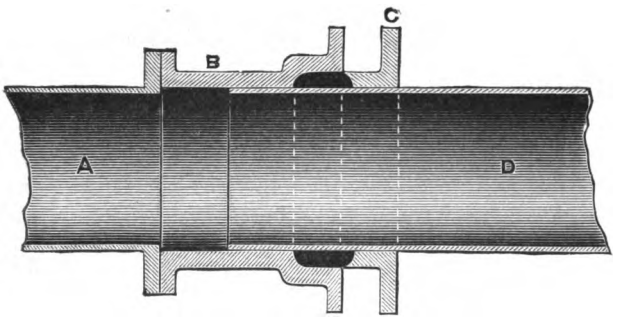

FIG. 85.—EXPANSION JOINT. (Page 199.)

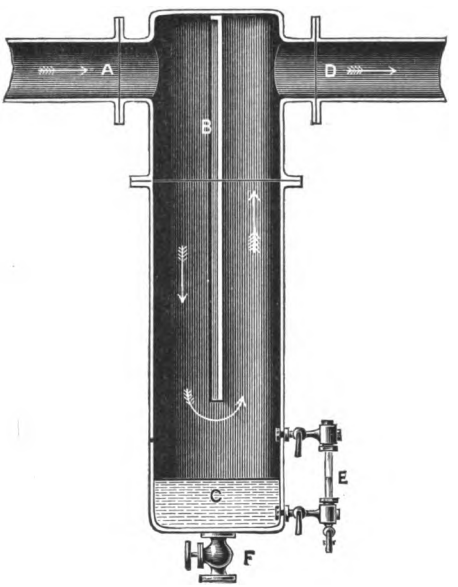

FIG. 86.—SEPARATOR. (Page 200.)

Digitized by Google

Digitized by Google

ENGINES

LESSON XIX

Sectional elevation of *vertical direct acting* marine engine, with names and description of parts.

Engines.—The *cylinder* and its fittings, sketch of *piston* and its parts. *Piston rod, guide block, guides, piston rod crosshead, connecting rod, crank, crank shaft, main bearings, sole or bed plate.*

It is essential that engines fitted in H.M. ships of war should be well protected, and in the early ships, engines with their cylinders placed horizontally, and thus called *horizontal engines*, were fitted below the water line; in all ships built during the last few years and now building, engines are fitted with their cylinders placed vertically, and thus called *vertical engines*, the upper parts being protected by armour plating if necessary. The engines of merchant steamers making long sea voyages are of the vertical type.

In the first screw steam-ships the engines were fitted to drive the screw by means of gearing between the engine and screw shafts. In modern ships the screw shaft is worked directly by the engines; and, being vertical, they are described as *vertical direct acting.*

Engines vary in size according to the power they have to develop, also in the details of their fittings; but the sectional elevation of an engine will give a good idea of the general arrangement; a separate description will be given of the parts

Digitized by Google

with additional sketches where necessary. In warships the engines are made as light as possible, and work at higher speeds than those of merchant vessels, but the descriptions given apply fairly well to both classes.

The parts of Fig. 87 will now be named and then explained.

A is the pipe fitted to convey steam from the *throttle* or *regulating* valve (which is a kind of stop valve) to the slide jacket and slide valve, which admit steam to the cylinder; these are on the other side of the cylinder and cannot be shown in this view, they will be described in the next lesson (p. 217).

B is the *cylinder* with jacket around it (p. 209).

C „ *piston* with packing ring (p. 210).

D outlet for steam after having done its work in the cylinder.

E is the *piston rod* secured to piston by nut (p. 213).

F „ *guide block* attached to piston rod crosshead.

G „ *guide*.

H „ *connecting rod*, having a bearing at each end (pp. 70, 213).

I „ top of connecting rod, fitted with pin working in crosshead bearing.

J is the hollow *crank pin* in section; bottom of connecting rod is also in section to show *crank pin bearing* (p. 213).

K is the hollow *crank shaft* (pp. 74, 214).

L „ *crank shaft bearing* with *cap*; framing is cut away to show *bolt* holding cap in place.

MM are the *eccentric rods* (pp. 74, 224).

N is the *link* of reversing gear (p. 224).

O is a lever operating "weigh shaft" for reversing the engines.

P „ rod connecting lower lever on weigh shaft with link of reversing gear.

Q *air pump lever* worked off piston rod crosshead.

R is the *air pump rod*, with guide rod working in guide in bracket.

S „ *barrel* of the air pump (pp. 132, 233).

T „ opening to bottom of air pump; a pipe is connected to this from condenser, conveying air, condensed steam, etc. (p. 230).

U shows the metallic disc *foot valves* at bottom of air pump (p. 127).

V is the *air pump bucket* with metallic disc valves (p. 127).

W shows the *delivery valves* of air pump (p. 127).

X shows outlet from air pump; a pipe connects this to feed tank.

YY show the *engine framing* on right, and *column* on left.

Z is the *sole plate* or *bed plate*.

Digitized by Google

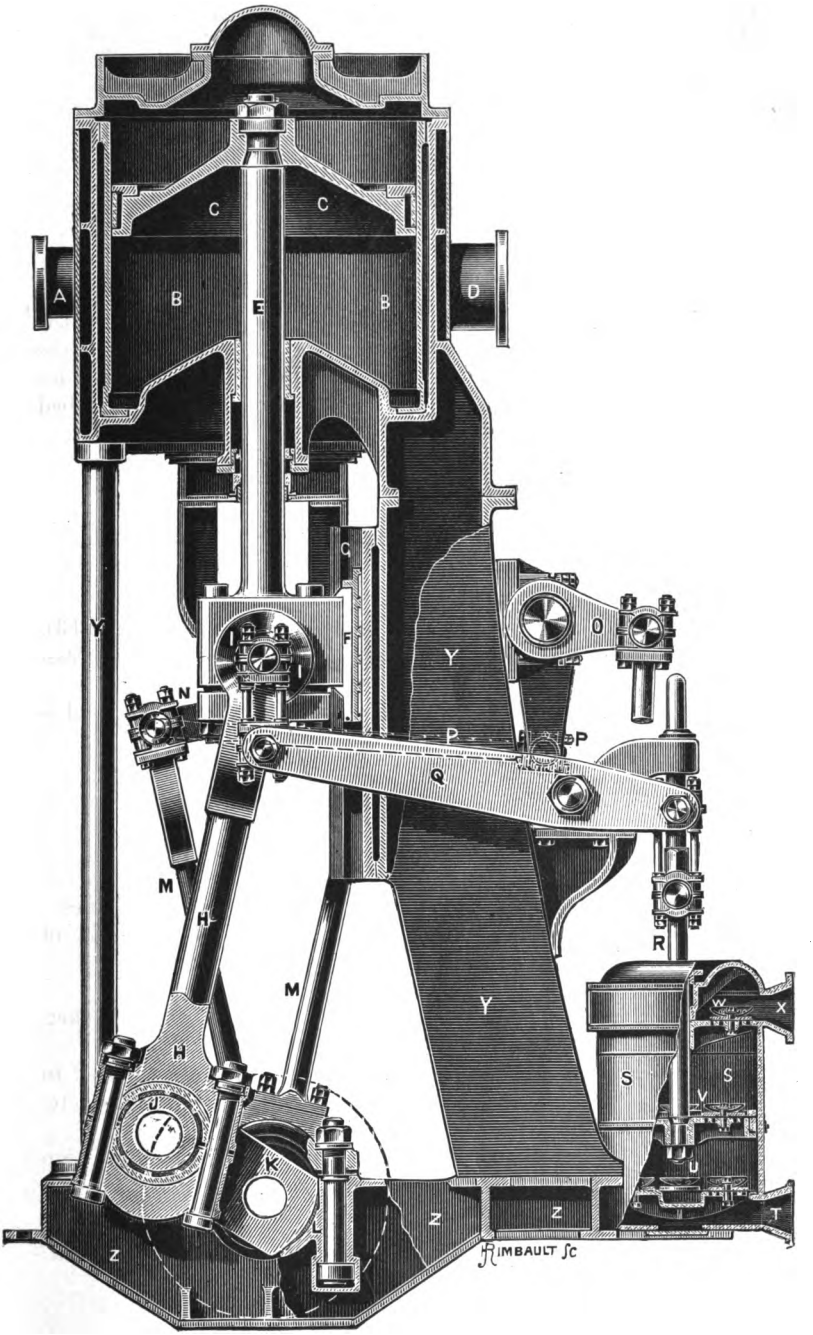

FIG. 87.—SECTIONAL ELEVATION OF VERTICAL DIRECT ACTING ENGINE.

Digitized by Google

Digitized by Google

Digitized by Google

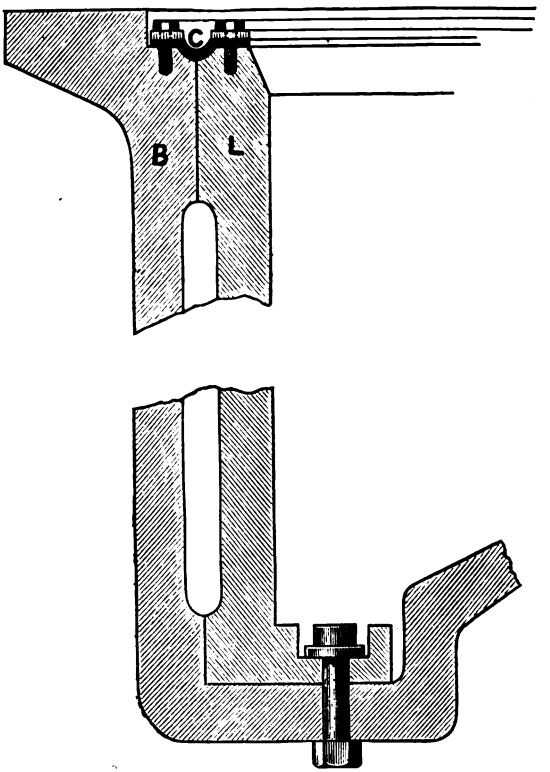

FIG. 88.

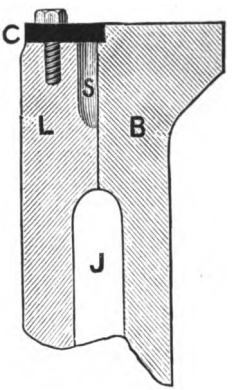

FIG. 89.

Digitized by Google

THE CYLINDER AND ITS FITTINGS.—The cylinder consists of two parts: the *cylinder* proper (B, Fig. 88), made of cast-iron, and the *liner*, or working barrel L, made of Whitworth steel or hard cast-iron, which is very accurately bored and is fitted inside the cylinder itself. A space J, about one inch wide, is left between the cylinder and liner for the greater part of the height. This space is called the *cylinder jacket;* it is kept full of steam when the engines are working, to supply heat to steam expanding inside the cylinder, and so preventing it from cooling and condensing.

The bottom of the liner is firmly bolted to the cylinder (Fig. 88), the joint being made steam-tight with asbestos cloth or sheet insertion (see p. 114). The top of the liner is secured to the cylinder, but not rigidly, an arrangement being made to allow of vertical expansion without leakage of steam from the jacket. Two forms of this joint are shown in Figs. 88, 89. In Fig. 88 it consists of a copper ring C bolted to the cylinder B and the liner L, and fashioned so that the pliability of the copper will allow either the liner or the cylinder to expand independently.

In Fig. 89 the small space S is filled with packing, and the copper ring C is a cover plate to keep the packing in its place. This ring is bolted to the liner only; then the two can expand independently, while the packing will keep the joint steam-tight.

The bottom end of the cylinder is usually cast in one piece with it, and the top end is fitted with a *cover*. The outsides and covers of cylinders are usually lagged or clothed and cased with polished wood, as shown in sections.

Escape valves are fitted at both ends; these are loaded with springs screwed down to a little above the working pressure. Should there be water in the cylinders when the engines are working, these valves open automatically, owing to the increased pressure, and allow it to escape. The valves and springs are covered by *guards* with outlets for water.

Drain cocks are also fitted to both ends. They can be worked

Digitized by Google

by levers from the engine-room platform, and are opened before starting the engines, to get rid of any water that may have accumulated.

Auxiliary starting valves are sometimes fitted, communicating with each end of the cylinder, to enable the engines to be easily worked when getting under way. They are worked by hand and admit steam to either end of the cylinder independently of the slide valve.

Jacket steam pipes are fitted to supply steam to the cylinder jackets, and *jacket drain pipes* to take away the condensed steam from them.

An *indicator pipe* is fitted to the cylinder at each end, so that an instrument called the *Indicator* may be applied, to record the action and pressure of the steam, during each stroke of the piston.

PISTON.—The *piston* is fitted to work steam tight in the cylinder, and is pushed up and down by the steam acting alternately on one side and the other. It is shown at C, in Fig. 87, and in detail in Fig. 90. That shown in Fig. 90 is of cast-iron, and made hollow, as shown at H, so as to be as light as possible. Pistons of this type were fitted in the older engines, but in modern engines they are made of cast-steel of the form shown in Fig. 87, and having only one thickness of metal are about 40 per cent lighter than the older form. To make the piston work steam tight in the cylinder, it is fitted with a *metallic packing ring* B which is pressed out against the sides of the cylinder by several *steel springs*. Coach springs KK are shown in Fig. 90, but in modern practice spiral springs are used.

The packing ring is held in place between a flange on the body of the piston A, and a ring C, called a *junk ring*, held down by the *junk ring bolts* D screwing into holes E in the piston. These bolts are prevented from slacking back by a *guard ring* F bearing against one side of the head of each, and held down by bolts G. In order that the packing ring may be free to be pressed against the cylinder it is cut across, and to prevent steam passing through the space a *tongue piece* T is fitted.

Digitized by Google

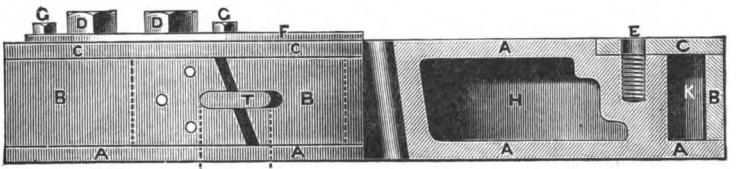

ELEVATION (HALF SECTIONAL).

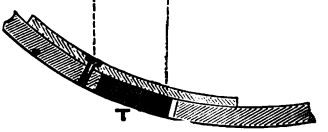

TONGUE PIECE.

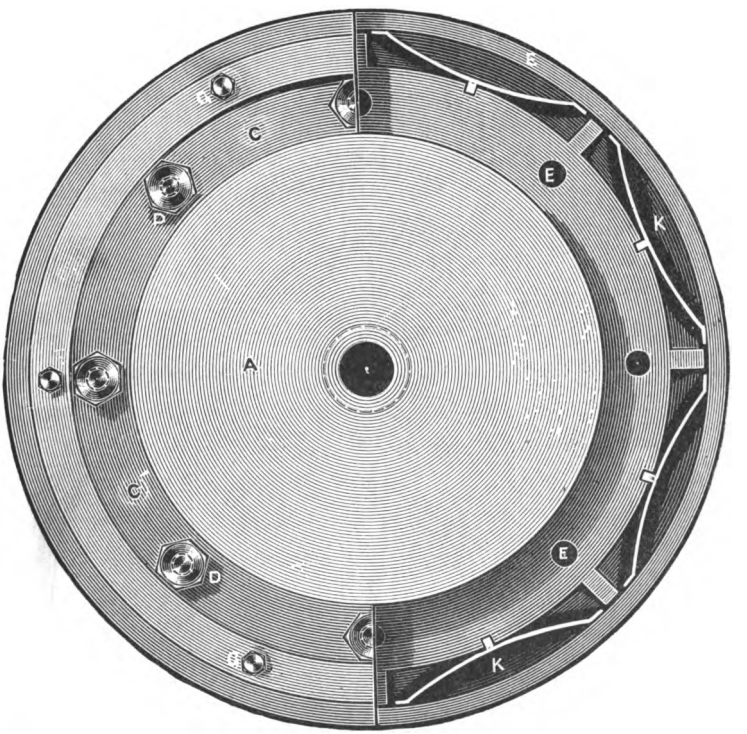

HALF PLAN, WITH JUNK RING AND GUARD RING ON.

HALF PLAN, WITH JUNK RING AND GUARD RING REMOVED.

FIG. 90.—SKETCHES SHOWING DETAILS OF PISTON. (Scale, ¼ size.)

Digitized by Google

Digitized by Google

In horizontal engines the pistons are fitted with a *filling piece*, which takes the place of some of the springs at the bottom. It extends about a quarter of the way round the piston, and makes the metallic packing ring assist in supporting the weight of the piston on the cylinder, which it would not do were springs alone fitted.

Clearance.—It is usual to allow a space of about $\frac{1}{2}$ an inch between the ends of the cylinder and the piston at each end of its stroke; these distances are called the *clearance* of the piston, top and bottom. To allow for wearing of the joints of the connecting rod, the bottom clearance is generally made more than the top.

PISTON ROD.—The *piston rod*, usually made of wrought-iron or forged mild steel, is attached to the piston by making the top end conical, and fitting it into a corresponding cone bored in the centre of the piston; the end of the rod is screwed and fitted with a nut which is screwed up hard on the piston and prevented from slacking back by a set screw or other suitable means. The piston rod works steam tight through a *stuffing box and gland* in the cylinder bottom, and its end outside the cylinder is fitted with a *guide block* F, which works in *guides* G formed on the columns (Fig. 87).

The guide block usually has a gun metal plate or *shoe* bolted to it, this is fitted with strips of white metal, which work on the guides. These are generally of cast-iron.

The object of the guide blocks and guides is to keep the end of the piston rod working up and down in the same vertical line.

CONNECTING ROD AND CRANK.—The end of the piston rod outside the cylinder is fitted with a bearing, in which a pin on the upper end of the *connecting rod* works. This is called the *crosshead bearing* (see p. 70 and Fig. 35).

The lower end of the connecting rod is attached to the crank pin J on the crank shaft K by *brasses* lined with white metal, a *cap* and *bolts*, forming the *crank pin bearing*.

Digitized by Google

The *crank pin*, with the *crank arms* and *crank shaft*, are usually made in one mild steel forging, the pin and shaft being made hollow for the sake of lightness. The crank shaft for each engine of a complete set is sometimes made separately, the several lengths being bolted together by flanged *couplings*.

The crank and connecting rod are fitted to convert the up and down motion of the piston and piston rod into a rotatory motion which is communicated by the crank and propeller shafting to the screw propeller. As will be seen, the piston rod *pushes* the connecting rod down during the downstroke of piston and *pulls* it up during the upstroke; so that the piston and connecting rods are inclined to each other during each stroke, and a considerable horizontal pressure is thus thrown on the guides. The longer the connecting rod is made in proportion to the length of the crank arm, the less this pressure will be; but owing to the engines having to be kept low down in the ship the length available for the connecting rod is limited.

The length of the connecting rod from centre of crosshead bearing to centre of crank shaft bearing is made at least four times the length of the crank arm. It is made of wrought-iron or forged mild steel, and is sometimes made hollow so as to be as light as possible.

The motion of the centre of the crank pin round the centre of the crank shaft is shown by the dotted circle (Fig. 87).

The crank shaft is supported by the *main bearings* L, which are fitted with *brasses* lined with white metal, the *sole plates* being formed to receive them as shown. The top brasses are held down by *caps* and *bolts*.

The *sole plates* or *bed plates* are bolted down to an *engine bed*, formed by the framing of the ship to receive them, so that the centre line through the main bearings and that through the propeller shaft bearings shall be *exactly* in the same straight line.

Digitized by Google

Digitized by Google

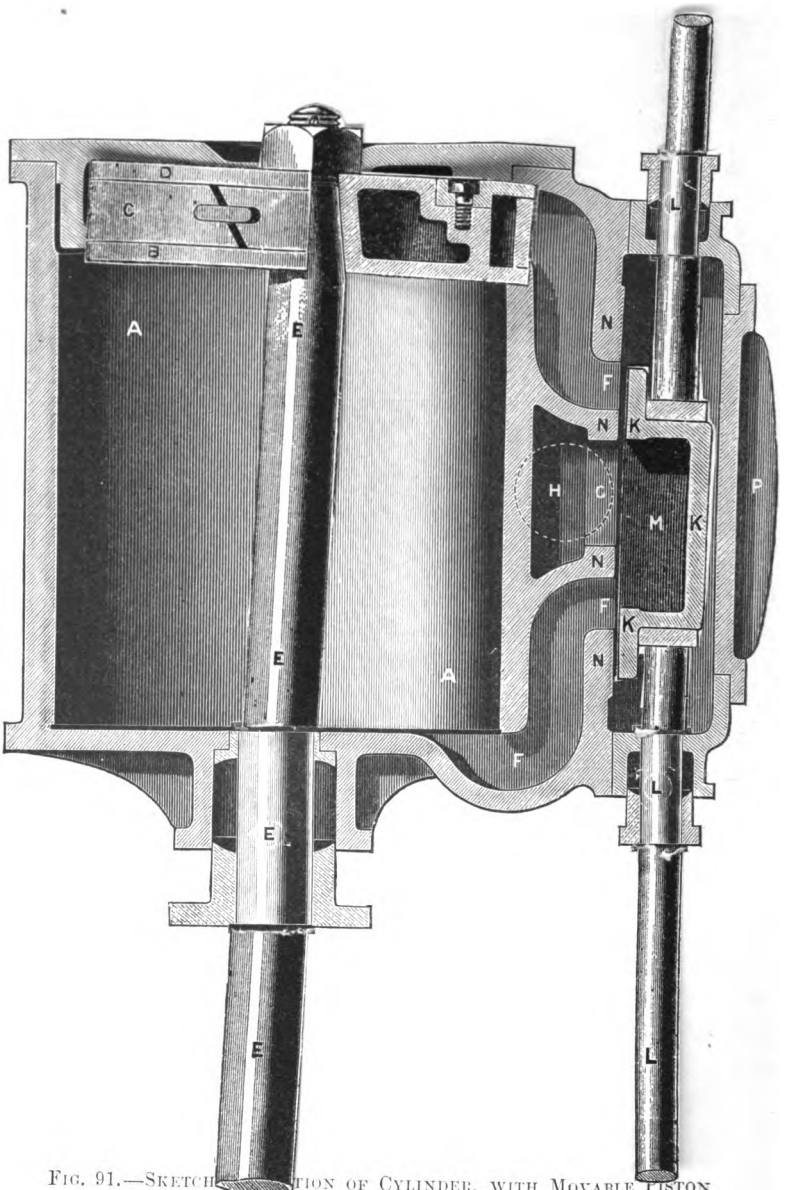

FIG. 91.—SKETCH[illegible]TION OF CYLINDER, WITH MOVABLE PISTON AND SLIDE VALVE. (Page 217.)

Digitized by Google

LESSON XX

Sketch of section of cylinder, with movable piston and slide valve, description of working of *single ported slide valve*, description and advantages of *double ported slide valve*, and of *piston valve. Balance piston.*

Method of working slide valves by *eccentrics*, *eccentric straps* and *rods*, meaning of *lap*, *lead*, and *angular advance*. *Go-ahead* and *go-astern eccentrics, etc.*, necessary. Sketch and description of *link motion* and *reversing gear.*

SLIDE VALVE.—Referring to Fig. 91, A represents a section of a *cylinder* fitted with a *piston* B, having a *packing ring* C held in place by *junk ring* D, and fitted with a piston rod E. Steam is admitted to and leaves the top and bottom of the cylinder through the *ports* or passages F F, being admitted and released by the *slide valve* K shown in section, which is worked up and down by a rod L; it finally leaves the cylinder by the *exhaust port* or passage G, and a pipe fitted to circular opening H at side of cylinder. The slide valve is hollow, as shown at M, and works over the ports on the bars N; the casing or *slide jacket* in which the slide valve works is closed by a *casing cover* P, and the top of the cylinder is fitted with a cover R.

We will now, by means of the movable sketch, investigate the action of the slide valve in regulating the supply of steam to, and its exhaust from the cylinder.

Steam is admitted to the *slide jacket* or space around the slide valve from the steam pipe through the regulating, or throttle valve (not shown in sketch). This valve regulates the speed of the engines according to the amount it is opened.

Digitized by Google

We will suppose the slide valve to be in its middle position, and the regulating valve open, then it is obvious that although the slide jacket is full of steam at boiler pressure, the engines cannot work as the slide valve covers all the ports and no steam can enter.

If we suppose the slide jacket to be kept supplied with steam and we move the slide valve up, steam will flow in at the bottom cylinder port, and will push the piston up. If we now move the slide valve down, the bottom cylinder port will first be closed to steam; the top port will then be opened for the admission of steam to the top of the piston. At the same time the bottom port will be placed by the hollow space under the slide valve in connection with the exhaust port; so that the steam which forced the piston up is free to leave the cylinder, and offers little opposition to the piston being forced down by the pressure of the steam on top of it. If we continue to move the slide valve up and down and imagine steam to be supplied, the piston will be forced up and down in the cylinder with each movement of the valve. It will be seen that the exhaust port is larger than the steam ports; this is necessary, because the steam expands in the cylinder and requires more space to leave than it takes to enter. The slide valve also need not open the port to steam the full amount, but to exhaust it must do so.

Double Ported Slide Valve.—The valve just described is called a *single ported slide valve*, as there is only one *port* or passage for steam to enter and leave at each end of the cylinder. This kind of valve does very well for engines of small size, but for large engines the length of stroke or *travel* of the single ported valve would be very large, and it is more convenient to use a *double ported valve*, which requires only half the travel to admit the same amount of steam; also steam is admitted much faster, as it can come through double the amount of opening in the same time, which is of advantage with quick running engines.

Digitized by Google

Referring to Fig. 92, which represents a section of a double ported slide valve A in its middle position, it will be seen that the steam ports B B B B, instead of being two openings in the cylinder face, leading to each end of the cylinder, are divided into two parts, each being one-half the width necessary for a single port, so that the travel of the slide valve to admit a given quantity of steam need only be one-half that required for the ordinary valve.

In the single ported slide valve, the steam is only admitted round the back of the valve and enters the cylinder when the valve has moved sufficiently to uncover the port. The steam on the outside of the double ported slide valve acts in the same way; but in addition steam is admitted to the passages D D in the body of the valve itself. B B B B are the steam ports in the cylinder, two of which lead to each end; C is the exhaust port in the cylinder, and E E are the exhaust passages in the slide valve which open the two outer ports B to exhaust. The hollow in the middle of the valve opens the two inside ports B to exhaust. The valve is worked by the rod G.

Both these valves have the disadvantage that their faces are forced against the valve faces on the cylinder by the pressure of steam on their backs, causing a large amount of friction. This is more especially the case with double ported valves, which are often of large size, in some cases over six feet square, and it is necessary to use some means of relieving this pressure. The back H of the double ported valve (Fig. 92) is fitted with a projecting ring, shown in section at F; this is planed true and works on a corresponding ring fitted to the inside of the casing cover, so that it can be held steam-tight against the valve. Steam is thus prevented from acting on a great part of the back of the valve. A pipe leading to the condenser is also sometimes fitted to this space. There is still, however, a large amount of friction, and the *piston valve*, shown in section in Fig. 93, is generally used with very high pressure steam; this valve has the advantage of being perfectly balanced as far as the pressure of steam is

Digitized by Google

concerned, it also gives a large amount of opening for a small movement.

PISTON SLIDE VALVE.—This valve, as fitted to one of the new second-class cruisers, is shown with its cylinder in section in Fig. 93. A represents the cylinder, with piston B and rod K, which are supposed to be moving upwards; the cylinder ports are marked C. Steam is supplied through the opening D from the regulating valve to the top and bottom of the piston slide valve G, which is kept steam-tight in the casing round it by packing rings, and is worked up and down by the rod L. Steam can pass through the valve. The ports E E round the circular slide casing lead to the cylinder ports C C. The middle of the valve H is made smaller in diameter than the top and bottom of the valve; this corresponds with the hollow under the ordinary slide valve. The exhaust passage is marked F; a pipe not shown in the sketch is fitted to a circular opening in this passage and takes the exhaust steam away. It will be seen that in this valve also the opening for steam to enter is not made so large as the opening for it to exhaust through.

In the position in which the valve is shown, steam is entering the passage round the bottom of the valve as indicated by the arrows. Passing into the cylinder by the bottom port it pushes the piston up: at the same time the exhaust steam escapes by the top cylinder port through the passage E, round the upper part of the valve casing, into the exhaust outlet F, as shown by arrows, and thence through the exhaust pipe into the next cylinder.

Balance Piston.—It is customary in some cases to fit a small cylinder in the casing over the slide valve in which a piston connected to the valve rod works. Steam acting on the under side of this piston has a constant tendency to lift the valve and so take its weight off the mechanism underneath; pipes are led to the condenser from the tops of these cylinders. The balance pistons can be seen in sketch of engines of second-class cruiser (Fig. 98, facing p. 242).

Digitized by Google

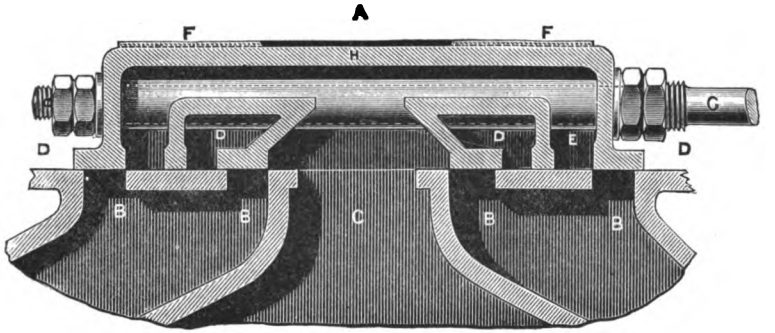

FIG. 92.—SECTION OF DOUBLE PORTED SLIDE VALVE. (Page 219.)

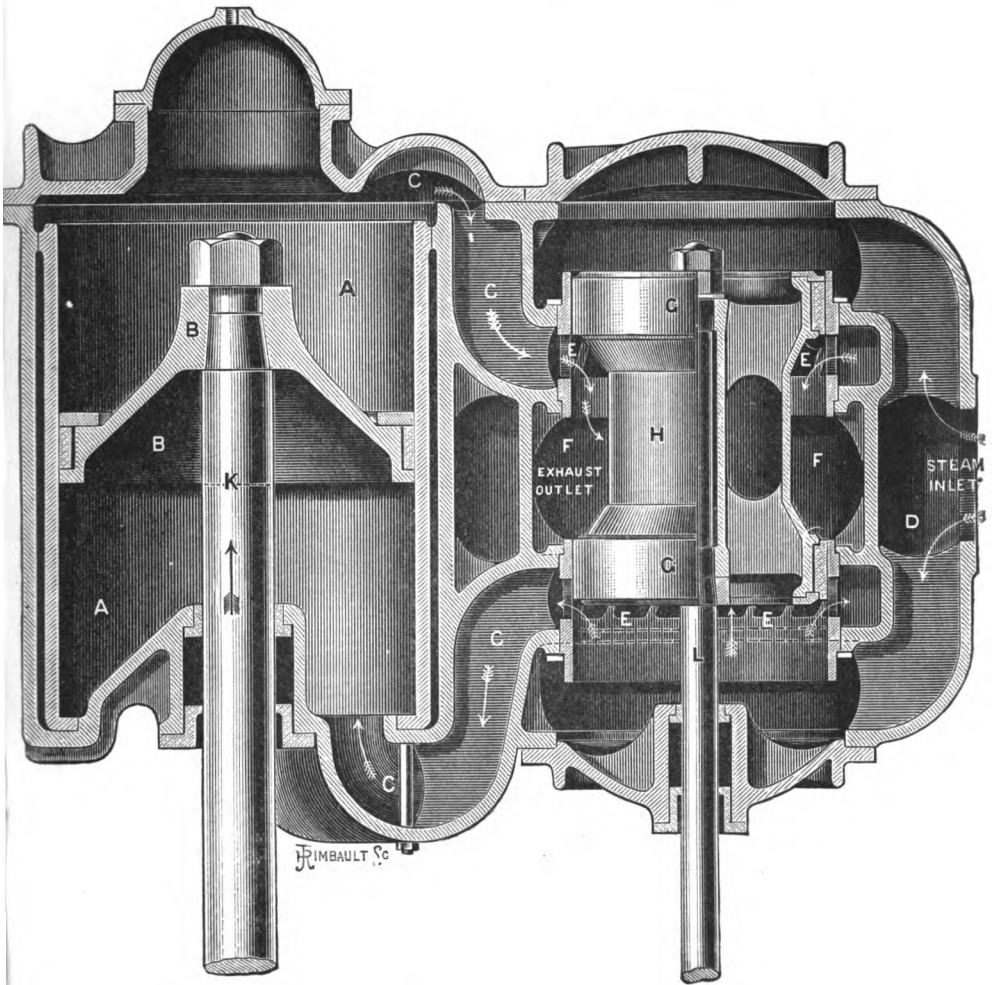

FIG. 93.—PISTON SLIDE VALVE. (Page 220.)

Digitized by Google

Digitized by Google

Slide Rod Guides.—The rods for working slide valves are usually fitted to work in guides; the bracket seen at back of piston rod in Fig. 87 is fitted to hold the slide rod guide.

Detachable Valve Faces on Cylinders.—The face of the cylinder on which the slide valve works is usually made separately of hard cast-iron and bolted on; this can be taken off if necessary for repair and a spare one fitted.

Working Slide Valves by Eccentrics; Lap, Lead, and *Angular Advance.*—The slide valve of an engine is made to move up and down to open and close the steam and exhaust ports at the proper times by means of *eccentrics,* which are designed to give the necessary amount of travel to the valve. The eccentrics are fitted with *straps* and *rods* as described on p. 74.

In the simplest form of valve, which exactly covers the steam ports when in its middle position, the steam port would begin to open exactly as the piston began its stroke, and to close it at the end of its stroke; the opening and closing of the exhaust ports would take place at corresponding times, and the centre line of the eccentric would be at right angles to the crank. It is found necessary to modify this in marine engines, and as will be seen in working valve, Fig. 91, the edges of the valve lap over the steam ports a considerable amount at each end when in its middle position; this is arranged so that the valve shall close the port to steam some time before the end of the stroke of the piston, and so allow the steam in the cylinder to expand. This amount of lap or cover of the valve is called its *lap on the steam side.* The valve is also sometimes made to close the passage to exhaust shortly before the end of the stroke, so that the piston shall be brought to rest by compressing the steam remaining in the cylinder; this is done by having *lap on the exhaust side* of the valve. In some cases it is necessary to open the exhaust port before it would be opened by the ordinary valve, and part of the slide is taken away; the valve is then said to have *negative lap on the exhaust side.*

Lead of the Valve.—It is also found advisable in fast work-

Digitized by Google

ing engines that the slide valve shall be open a small amount to steam before the end of the stroke of the piston, so that it shall have a free supply of steam at the commencement of the next stroke; this amount of opening is called the *lead* of the valve.

Angular Advance of the Eccentric.—In order that the valve may have the required amount of lap and lead, and open and close the ports at the proper times, it is necessary to fix the eccentric on the shaft at a greater angle than a right angle with the crank; the excess over a right angle is called the *angular advance of the eccentric.*

Eccentrics and Link Motion.—Two eccentrics with straps and rods are necessary for working the slide valve, one for the *go-ahead* and one for the *go-astern* motion, as one eccentric will only open and close the valve for one direction of motion of the crank shaft; and it is necessary to have a method of connecting either with the slide valve rod as may be necessary, so that the engine may be readily made to revolve in either direction. This is provided by the *link motion* shown in Fig. 94.

In this sketch A is the section of the crank shaft to which the *eccentrics* B and C are fixed by keys, the crank is shown below the shaft; D and E are the *eccentric straps* and F and G are the *eccentric rods.* The top end of the *go-ahead* eccentric rod is attached by a working joint to one end of the curved bar or link H, and the top end of the go-astern rod to the other.

This link is attached to the slide rod I by means of the *link block* K, and a suitable forked end on the slide rod, and is capable of being pulled to and fro by means of the *suspending* or *lifting link* L so as to put the slide rod in connection with either the ahead or astern eccentric rod. The link, eccentric rods, etc., are called *link motion.*

In all modern ships special small engines are fitted and connected to L, so that the link may easily be worked to and fro when necessary to start or reverse the main engines. In the sectional elevation (Fig. 87) the lever O on the weigh shaft,

Digitized by Google

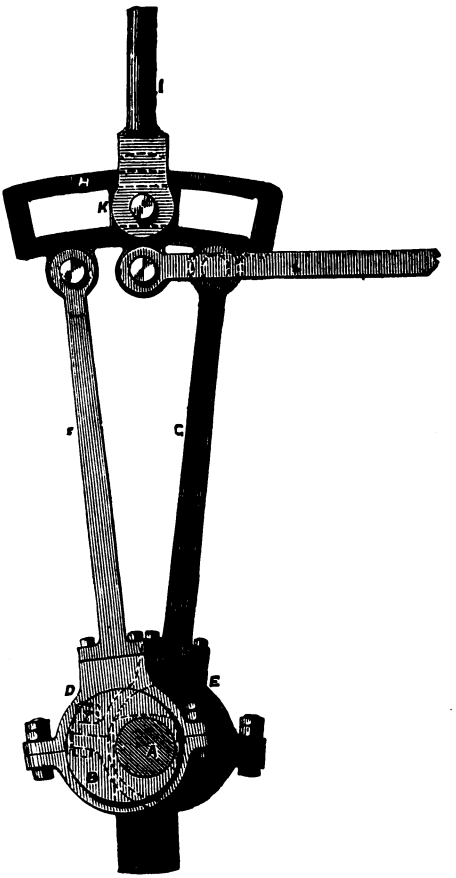

FIG. 94.—END VIEW OF LINK MOTION.

Digitized by Google

Digitized by Google

which is held in bearings as shown, can be pulled up and down by the rod on the right, which leads to the reversing engine; this works the lower lever P to and fro, and also the link.

The slide valves are usually so arranged that they do not cut off the supply of steam to the cylinders until from $\frac{5}{8}$ths to $\frac{3}{4}$ths of the stroke of the pistons is completed. Then, supposing there is sufficient pressure of steam in the slide jackets, in whatever position the engines may be, if the slide valve rods be put in connection with either end of the links, they will put the slide valves in such positions that at least one of the pistons will be acted on by steam pressure, and the engines will begin working.

If we imagine a pair of engines, each taking a separate supply of steam from the main steam pipe, exhausting to the atmosphere and working cranks at right angles to each other so as to drive a screw propeller, to be ready to begin working; and that we set the engines in motion, following the action of the steam and the motions of the engines, they will be as follow.

Let us suppose that the after piston is at the bottom of its stroke, and we wish the engines to go *ahead;* the *ahead eccentric rods* are put in connection with the *slide rods* by pushing over the *links;* then, confining our attention to the after slide valve, we know that it will be a little open to steam on the bottom side, due to the lead. If steam be put on, the forward engine will pull the after over the dead centre, then steam will flow under the after piston and push it up; meanwhile the eccentric will have caused the valve to rise, and to be full open to steam a little after the beginning of the upstroke. When the piston gets to a certain position in its stroke, the eccentric begins to pull the valve down to shut off the supply of steam, and when about three-quarters of the stroke is completed the valve will close, the steam in the cylinder expanding and completing the upstroke of the piston.

Shortly before the piston is at the top of its stroke, the

Digitized by Google

exhaust side of the valve will have opened a passage to the atmosphere for the steam that pushed the piston up; then the passage to the atmosphere from the upper side of the piston will close, and just at the completion of the stroke the slide valve will begin to open to admit steam to push the piston down.

This action is continued on the downstroke, and so the shaft and screw are made to revolve in the ahead direction. To go *astern* the links are pulled over until the slide rods are put in connection with the *astern eccentric rods*. The engines then turn in the opposite direction. When the link is put so that the link block and slide rod are half-way between the two eccentric rods, there will be no motion of the engines, as the slide valve will come to its middle position and close all the ports.

If the slide valve be kept moving up and down, and steam supplied, the piston will continue to work up and down in the cylinder, its motion being converted into the rotatory motion required for the propeller as before described.

There are other arrangements for reversing the engines in steam-ships, but the link motion is by far the most used.

Digitized by Google

LESSON XXA

THE STEAM TURBINE

Definition, De Laval Steam Turbine, Parsons' Steam Turbine, Axial Thrust, Westinghouse-Parsons' Turbine, Other Forms of Steam Turbine, Advantages of Steam Turbines, Propellers, Reversibility of Steam Turbines, Results of Recent Trials.

A steam turbine is a rotary engine, in which the moving portion is caused to rotate and do work, in virtue of a tangential pressure on it due to a change in the momentum of the steam passing through it.

The most simple form of steam turbine is one in which jets of steam, moving at high velocity, impinge upon curved blades, or vanes, secured to a wheel which is keyed to a revolving shaft, and cause it to rotate in much the same way as an ordinary windmill. The simplest form of a modern steam turbine is that of De Laval, the principle of which is illustrated in Fig. B.

The De Laval steam turbine consists of a solid wheel fixed to a shaft mounted in bearings. Round the edge of this wheel are formed buckets, or vanes, as shown. Steam is led from a boiler to a number of nozzles, placed near the wheel on one side, and inclined at an angle of about 20° to the face of the wheel.

Jets of steam from these nozzles impinge on the curved buckets, and are thereby deflected, causing the wheel to rotate in the direction indicated, and, after doing work, the steam escapes at reduced velocity, through the wheel, to a space connected to the condenser.

Digitized by Google

One of the nozzles is shown in section, in Fig. A; these nozzles are so shaped that, when steam passes through them, the heat and pressure energy of the steam is converted into velocity energy, and consequently the steam leaves them at a low pressure and temperature, but at enormous velocity. This velocity often reaches 3600 feet per second, or 2450 miles per hour. Each nozzle is fitted with a shut-off valve, so that, at reduced powers, one or more nozzles may be shut off.

Owing to the high velocity of the steam, the speed of rotation of the turbine shaft must be very great in order to secure economy; the rotational speeds of De Laval turbines range from 10,000 to 30,000 per minute. This enormous speed causes this turbine to have many distinctive features, of which the following may be mentioned as the most important:—

(1) Very careful design and workmanship are necessary, to ensure that each part shall be sufficiently strong to withstand the forces brought to bear on it, and that the centre of gravity of the rotating portions shall lie as nearly as possible on the centre line of the shaft. If this latter were not carefully attended to, the centrifugal forces arising from the rapid speed of rotation would cause vibration, and might be so great as to cause fracture of the wheel or shaft, just as a string, carrying a weight at one end, and held at the other, will break, if the weight be whirled round fast enough.

(2) The shaft has to be made "flexible," that is, so slender that, if the centre of gravity of the whole is not on the centre line of the shaft originally, the shaft will "spring," or bend at a certain speed, until the centre of gravity lies very near to the axis of rotation, at which speed the wheel runs true.

(3) Special helical gearing is introduced between the turbine shaft and the driven shaft, in order to reduce the speed of the latter to reasonable limits. By this means the speed of rotation of the driven shaft can be reduced to between 1000 and 3000 revolutions per minute, a practical speed for running dynamos, etc.

This turbine is said to be of the Simple Impulse form.

Digitized by Google

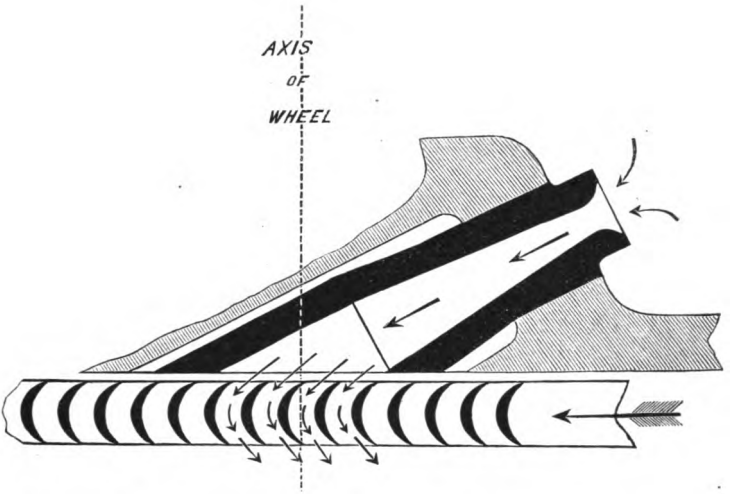

FIG. A.—DE LAVAL NOZZLE AND BLADES.

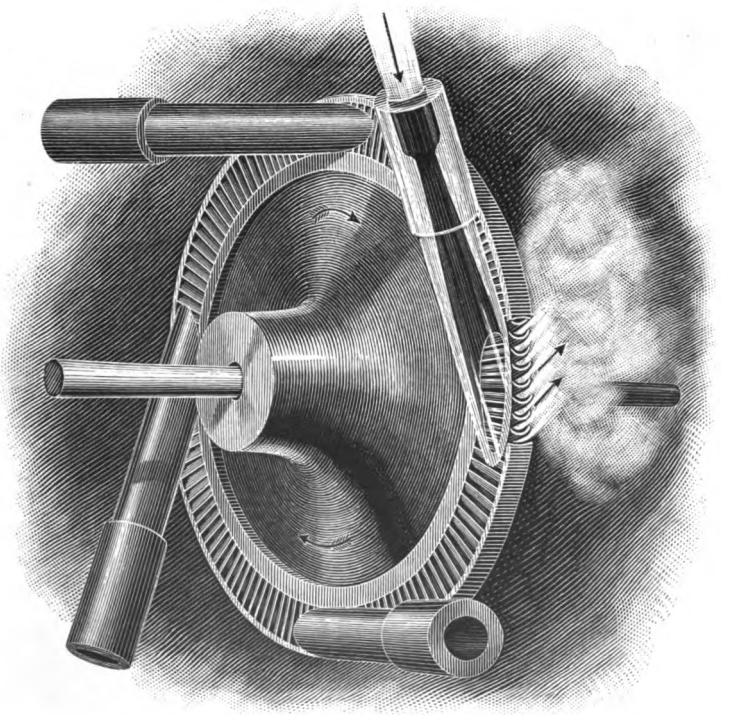

FIG. B.—DE LAVAL TURBINE WHEEL AND NOZZLES.

Digitized by Google

Digitized by Google

Digitized by Google

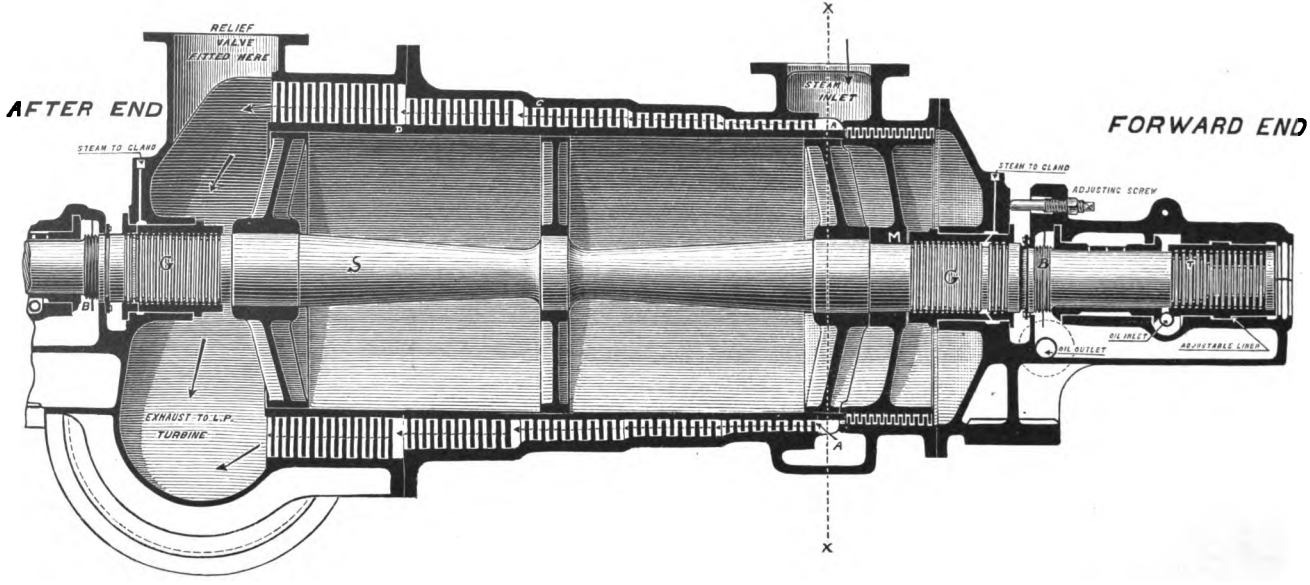

SECTIONAL ELEVATION.

FIG. C.—PARSONS' MARINE STEAM TURBINE.

Digitized by Google

The principal advance made in the most recent turbines has been in the reduction of the speed of rotation of the turbine shaft without the sacrifice of economy, thus avoiding the necessity of using gearing. The various forms of turbines differ principally in the manner in which this reduction of speed is effected.

The only type of steam turbine at present in use in H.M. Navy for the propulsion of vessels is the Parsons' steam turbine. In this turbine there are no nozzles as there are in the De Laval, and the turbine is said to be of the Reaction type.

In the Parsons' turbine, the steam in passing through is gradually and continuously reduced in pressure, each drop in pressure being accompanied by a corresponding increase in velocity, and therefore of momentum, which latter is absorbed as energy driving the turbine shaft. By this means the steam has quite a moderate velocity throughout, and the speed of rotation is thereby capable of reduction, without loss of economy, to about 500 or 700 revolutions per minute.

Fig. C shows a vertical section through a Parsons' marine steam turbine. It consists of a number of rings of curved guide blades, secured to the turbine casing C, which latter is rigidly attached to the hull of the vessel. Between each two consecutive rings of fixed blades there is placed a ring of moving vanes, of opposite curvature, secured to the revolving drum D. This drum is attached by keys to the screw shaft S, which, passing outboard, carries the propellers.

Steam passes from the boilers through a stop valve and gauze strainer (not shown in the figure) into the annular space A, whence it passes through the first ring of guide blades; these, being curved (see Fig. D), impart to the steam a velocity in a direction inclined to the axis of the drum. After leaving the first ring of guide blades, the steam impinges on the first set of rotating vanes, and these being of opposite curvature, cause the steam to be redirected into an axial direction at a reduced velocity, and consequently a tangential force is produced, which

Digitized by Google

drives the turbine. The steam then passes to the second set of guide blades, where its velocity is changed in direction due to the contrary curvature of the blades, and increased in magnitude owing to a reduction of pressure, and, on leaving them, impinges on another set of rotating vanes, and so on through the turbine until, on leaving the last set of rotating vanes, the steam escapes to the condenser, or to a L.P. turbine of larger dimensions but of similar construction to the turbine of Fig. C.

At intervals along the length of the turbine are enlargements of diameter, which cause a fall of pressure, and in consequence an increase of velocity, and so enable the expansive force of the steam to be utilised.

When the steam strikes the moving vanes, the direction and magnitude of its velocity are changed, and consequently, by Newton's Second Law of Motion, a force is produced which has two components, one tangential and driving the turbine shaft, the other axial and tending to cause an endwise motion of the shaft. Provision has to be made to prevent this endwise motion. In the Westinghouse-Parsons' turbine, used for dynamos, etc., this difficulty is got over by making the turbine symmetrical about the line XX (Fig. C), the right-hand portion being then similar to the left-hand portion of Fig. C, and consequently the axial thrust on the left-hand portion is exactly balanced by an equal and opposite thrust on the right-hand portion.

In the Parsons' turbine, as applied to marine propulsion, the axial thrust of the steam on the vanes is used to oppose the forward thrust of the propellers when driving the ship ahead, which, in reciprocating engines, is taken by the thrust block (p. 258).

The steam thrust is greater than the propeller thrust, and in order to reduce the resultant thrust along the screw shaft to a minimum, a device known as a "dummy piston" is introduced. This consists of a series of collars turned on the drum, M, which fit between rings attached to the casing, the collars bearing accurately on the sides of the rings. Steam is admitted to the after part of the "dummies," and as the casing in front of them

Digitized by Google

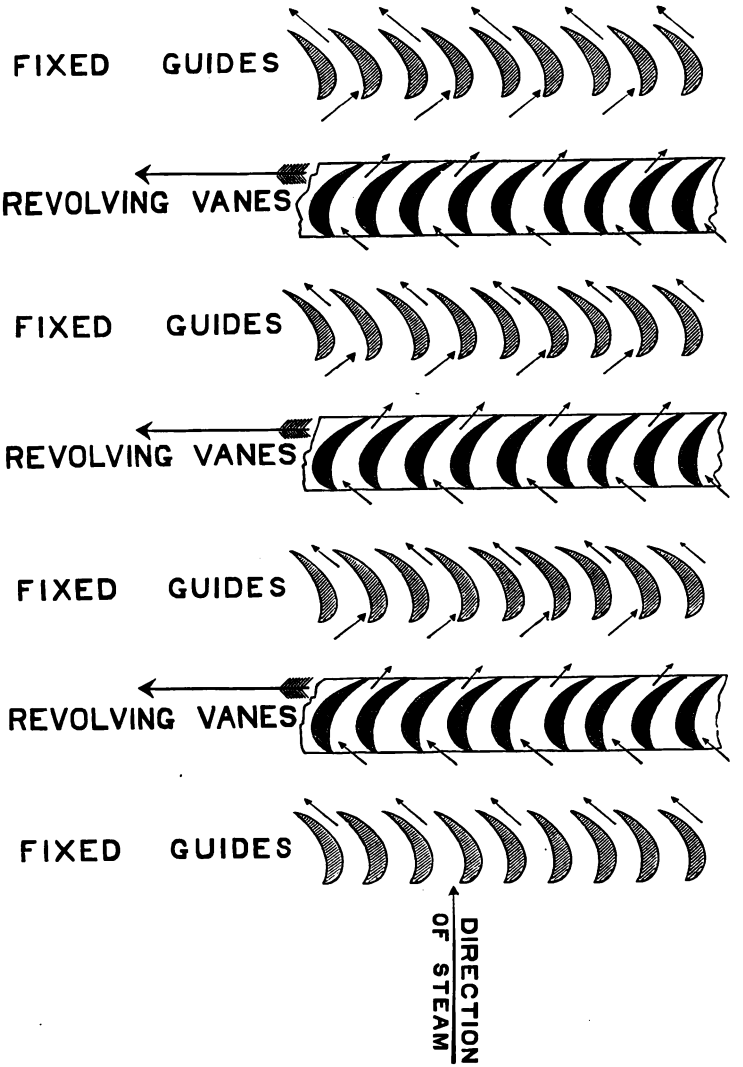

FIG. D.—PLAN OF PARSONS' TURBINE BLADES.

Digitized by Google

Digitized by Google

is connected to the interior of the drum, which is at the reduced pressure of exhaust, and as the rings are such a good fit as to prevent much leakage, there is thus a difference of pressure tending to cause the turbine shaft to move forward, which, with the thrust due to the propellers, just balances the thrust due to the impact of the steam. Any small unbalanced difference is transmitted to the small adjustable thrust block T.

The bearings are lubricated by oil which is forced through them by means of a pump, and the oil is prevented from creeping along the shaft and entering the turbine by the rings and collars shown at B.

A special form of gland G is fitted at each end of the turbine, where the shaft passes through the end covers. It is composed of a number of Ramsbottom rings which fit the interior surface of the gland bush, and bear upon the sides of grooves turned on the shaft. Leakage of air into the interior of the turbine through these glands (which, if permitted, would spoil the vacuum) is prevented by admitting a small quantity of steam to the gland, as shown, the steam being allowed to slightly leak outwards into the atmosphere, and this precaution renders the exclusion of air a certainty. Any steam condensing in the gland also tends to lubricate it, and it is found that no oil lubrication is necessary for these glands, and so the danger arising from the presence of oil in the boilers is very remote in the case of vessels propelled by this form of steam turbine.

An enlarged section showing the blading is given in Fig. E, and it may be noted that since, in this turbine, the steam has a considerable pressure, a certain amount of leakage must occur, through the spaces marked CC, and in order that this leakage may not be excessive, the clearances CC are made very small, generally not exceeding a few hundredths of an inch.

Many other forms of steam turbine exist, most of which are of the Compound Impulse form, *e.g.* the Reidler-Stumf, Curtis, Rateau, and Zoelly, in which the steam acts solely by its velocity and not by pressure.

Digitized by Google

In the Reidler-Stumf turbine, the steam enters the turbine by nozzles, similar to those of De Laval, and impinges on the wheel buckets, but owing to the shape of the buckets, and the low rotational speed, it escapes from them at considerable velocity. If the escaping steam were then led direct to the condenser, there would be a serious loss of economy. However, on leaving the first set of wheel blades, the jets of steam are received on fixed, curved guide channels, and are redirected on to another set of buckets on the same wheel, escaping from these latter to the condenser at moderate velocity. By this means a reduction of rotational speed may be effected without loss of economy.

In the Curtis, Rateau, and Zoelly turbines, which are all very similar, the steam is allowed to fall in pressure to a certain amount, in stages, and each corresponding increase of velocity is gradually absorbed by the revolving wheels under a constant pressure, until a chamber is reached where a further fall of pressure is permitted, and its velocity is thereby increased, only to be further absorbed on other wheels, and this occurs two, three, or more times, until the condenser is reached.

The relative advantages of the steam turbine over reciprocating steam engines are as follows:—

(1) There is a complete absence of vibration.

(2) Great simplicity of parts.

(3) Great reduction of condensation losses, due to the constancy of temperature at each point of the turbine.

(4) Absence of danger during the "priming" of boilers.

(5) No internal lubrication is necessary.

(6) The economy of the steam turbine is good, especially when using superheated steam, and with a good vacuum.

(7) The load on the bearings is due only to the weight of the parts, being independent of the power developed, and of the steam pressure.

Owing to the comparatively high speeds of rotation of

Digitized by Google

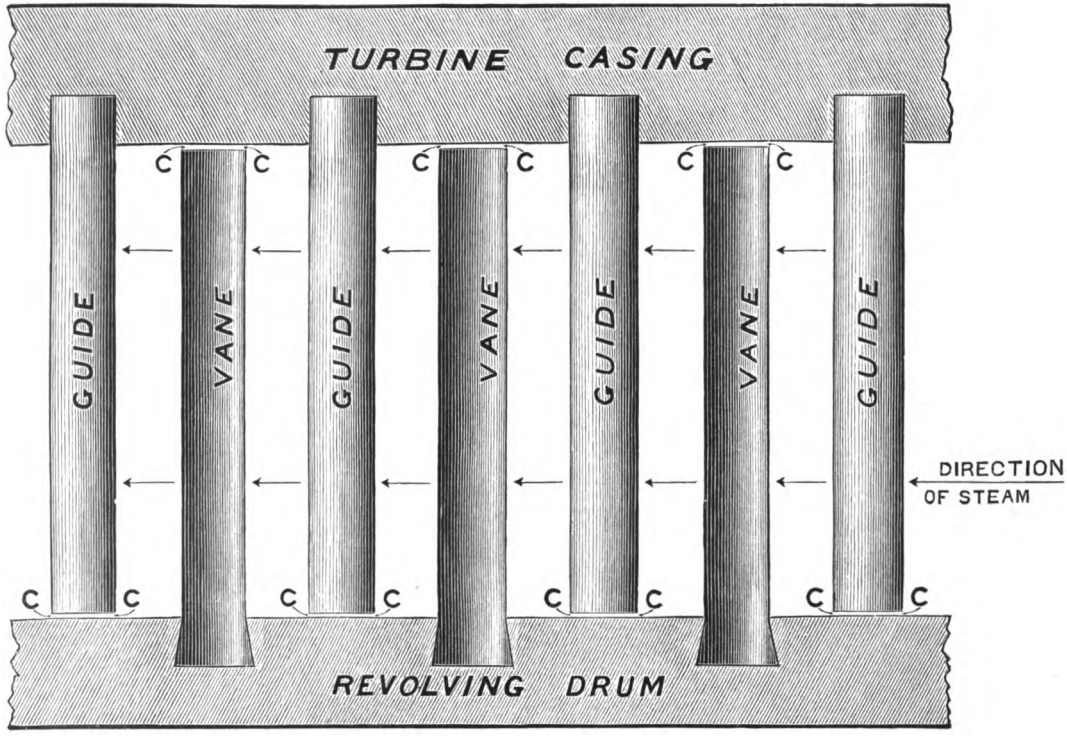

FIG. E.—PART LONGITUDINAL SECTION, SHOWING BLADING.

Digitized by Google

Digitized by Google

marine steam turbines, special propellers are found to be necessary, of small diameter and pitch, and frequently two or more propellers are placed on the same shaft.

No reliable and economical reversible steam turbine is yet known, so that, at present, reversal of the direction of motion of the vessel has to be effected by the use of a separate astern turbine, placed on the same shaft as the ahead turbine; in most cases these astern turbines are placed in the same casings as the ahead ones, to economise space, and in the exhaust parts of the ahead turbines in order to reduce their resistance when running idle, with the ship going ahead.

The following short description of the turbine machinery of H.M.S. *Amethyst*, and tabulated results of comparative trials between the *Amethyst* and her sister ship the *Topaze*, may be of interest.

The boiler power is the same in both vessels, but the twin screw engines of the *Topaze* are of the ordinary reciprocating type, whereas the *Amethyst* is fitted with an installation of Parsons' marine steam turbines.

In the *Amethyst* there are three screw shafts, with one propeller on each, and these run at about 500 revolutions per minute at full power. On the centre shaft is the main H.P. turbine, and on each side shaft is a main L.P. turbine. For any speeds above 20 knots, boiler steam is led to the main H.P. turbine, passing through this into each of the L.P. turbines, and finally to the condensers.

In order to secure reasonable economy at cruising speeds, to the port side shaft is secured an independent ahead turbine, known as the H.P. cruising turbine, and to the starboard side shaft is secured a similar turbine of somewhat larger dimensions, known as the I.P. cruising turbine.

For any speeds up to 14 knots, boiler steam is led first of all to the H.P. cruising turbine, passing through it and exhausting into the I.P. cruising turbine, whence passing successively through the H.P. main turbine and the L.P. turbines to the

Digitized by Google

condensers. By this means the expansive energy of the steam is made good use of, with consequent economy.

For speeds above 14 knots, and below 20 knots, the H.P. cruising turbine is shut off, and boiler steam is led direct into the I.P. cruising turbine, whence it passes successively through the H.P. main turbine and the L.P. turbines to the condensers.

For speeds above 20 knots the H.P. and I.P. cruising turbines are cut out, and only the main turbines are used. The results of trials show that below 14 knots the extra economy due to the high ratio of expansion of the steam is more than counterbalanced by the inefficiency of the turbine, owing to the slow speed. After 14 knots, however, the increase of economy is very marked, and at 20 knots the steam turbines used about 30 per cent less coal than reciprocating engines.

The following table shows the results of accurately recorded trials in the *Amethyst* and *Topaze*, 1904 :—

	Amethyst Turbine Machinery.						*Topaze* Reciprocating Machinery.					
Corresponding letters for trials.	A	B	C	D	E	F	A	B	C	D	E	F
Speed in knots . .	10	14·06	18·2	20·6	23·06	23·63	10·06	14·08	18·1	20·06	21·8	22·1
Revs. per min. { Centre shaft	167	237	320	361	436	450	..	..	..	..	..	..
Revs. per min. { Port shaft	204	290	348	402	493	500	107	150	197	219	244	245
Revs. per min. { Starb'd shaft	198	290	392	451	489	485	107	151	199	220	243	246
Feed water per hr., lbs.	26,260	44,090	76,493	100,606	176,845	190,525	21,294	42,260	94,867	134,248	209,950	199,140
Coal used per hr., lbs.	2893	4725	8372	10,937	24,035	24,412	2296	4640	10,484	15,451	27,700	26,150

The amounts of coal or water used at the same speed form a fair basis of comparison for economy.

It may further be stated that the machinery of the *Amethyst* weighs practically the same as that of the *Topaze*.

It would have needed about 14,000 I.H.P. to have propelled the *Topaze* at 23·63 knots, whereas it took nearly 10,000 I.H.P. to propel her at 22·1 knots, hence for the same weight of machinery, the *Amethyst* steamed 1½ knots faster, developed about 40 per cent more horse-power, and consumed about 7 per cent less coal per hour than the reciprocating machinery of the *Topaze*.

Digitized by Google

LESSON XXI

Condensation of steam, *vacuum*, *vacuum gauge*, *surface condenser* (sketch section); use of *air*, *circulating* and *feed pumps*. Changes in steam passing from boiler through engine and back to boiler. *Jet condenser*. Advantage of surface over jet condensation.

CONDENSATION OF STEAM AND CONDENSERS.—If steam be brought into contact with cold substances it is very quickly *condensed* or turned back into water.

A cubic *inch* of water when evaporated makes nearly a cubic *foot* of steam at atmospheric pressure, that is, it expands to about 1700 times its original volume. Conversely when this steam is condensed it goes back to its original cubic inch, the remainder of the cubic foot being approximately a *vacuum*.

Advantage is taken of this property of steam in the marine engine. The steam on leaving the exhaust port of the last cylinder it is used in is conveyed to the condenser by the *exhaust pipe*, and there turned back into water.

There are two systems of condensation, *surface* and *jet*; that now always employed in modern ocean steam-ships is *surface condensation*.

The SURFACE CONDENSER is a chamber in which a large number of brass tubes are arranged, so that cold water from the sea may be constantly pumped through them. The exhaust steam from the engines is led round the outside of the tubes, and coming into contact with their cold surface is immediately condensed and a partial vacuum is formed. The surface of the

Digitized by Google

tubes available for condensing steam is called the *cooling surface.* In some cases the exhaust steam goes through the tubes and the cooling water outside them.

Referring to Fig. 95, A is the inlet for steam from the exhaust pipe. The steam passing through A comes into contact with the outside surface of the tubes B, is condensed and falls to the bottom of the chamber into the space below the tubes, from which it is pumped away through H, together with any air or vapour, through a pipe leading to T in the sectional elevation Fig. 87, by the *air pump.*

The *tubes* B are secured in the *tube plates* C, and water is circulated through them by the *circulating pumps.* These are usually of the centrifugal description, worked by special engines, and are fitted to draw water either from the sea or bilge, as in the latter case they would be available for pumping water out of the ship in the event of a serious leak.

Condenser tubes are usually secured in the tube plates by means of small stuffing boxes and glands fitted to the ends of each, which enable the tubes to expand and contract as necessary, as they become hot and cold. These are shown in Fig. 96; K is the screwed gland or ferrule ; P, the packing.

To ensure a thorough circulation of water through all the tubes an arrangement similar to that shown in the sketch is usually fitted. Here the water comes in at D, goes through the lower series of tubes, and returns through the upper series, leaving the condenser at F, and going overboard. Water is prevented from going directly from one opening to the other by the plate G. It is usually arranged that the coolest water shall pass through the tubes where the steam is nearly all condensed, that is, farthest from the exhaust inlet.

The shell of the condenser is usually made cylindrical in ships where lightness is the great consideration, and the composition of the brass used for making the shell, tubes, tube plates, ends, etc., is made as nearly as possible the same to avoid galvanic action between the parts and consequent wasting away.

Digitized by Google

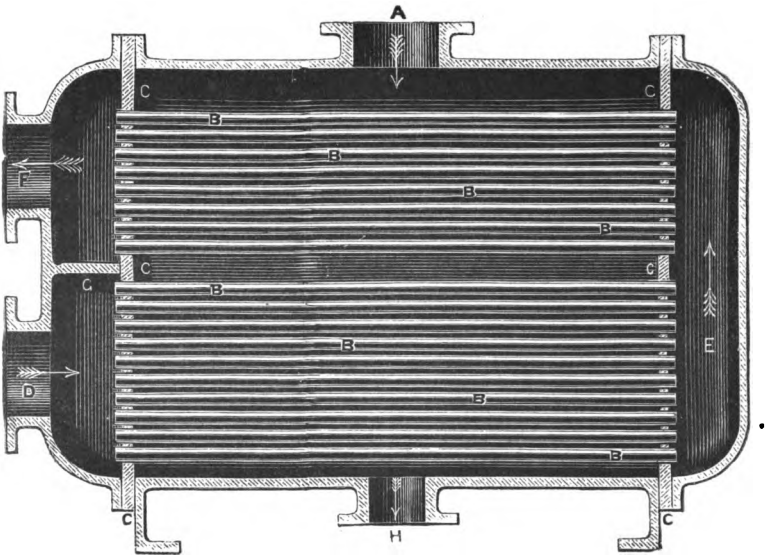

FIG. 95.—SECTION THROUGH SURFACE CONDENSER.

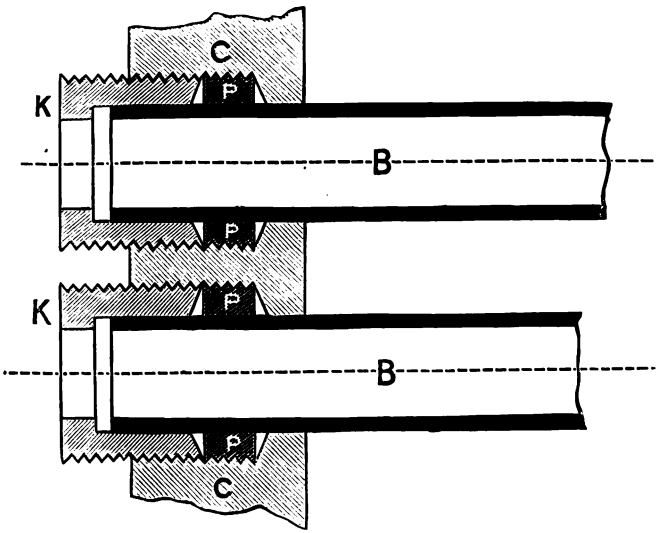

FIG. 96.—DETAIL OF CONDENSER STUFFING BOX.

Digitized by Google

Digitized by Google

In the majority of merchant vessels the shell of the condenser is of cast-iron, and forms part of the framing of the engines.

The vacuum in a condenser is measured by the *vacuum gauge*, which is usually a Bourdon's gauge, similar to that shown in Fig. 84, except that instead of an internal pressure tending to straighten the elliptical tube, the external atmospheric pressure causes the tube to become more curved when part of the internal pressure is removed. (See Aldous's *Physics*, p. 155.)

The gauge is marked from 0 representing atmospheric pressure, to 30 *inches* representing a perfect vacuum. The vacuum usually maintained is from 26 to 28 inches.

By means of the condenser the *efficiency of the steam*, on which the economical working of an engine greatly depends, is much increased.

Without entering into any theoretical considerations, it is very evident that a great advantage must be gained by allowing the steam, when it has done its work in the engine, to escape into a vacuum instead of having to force its way out of the exhaust port against the pressure of the atmosphere: for removing pressure from one side of the piston is equivalent to adding pressure to the other.

We have before stated that the condensed steam together with any air or vapour is pumped away by the air pump, and the vacuum is thus maintained.

The water from the air pump is led from the outlet X (Fig. 87) by a pipe to the *feed tank*, from which it can be pumped back into the boilers by the *feed pumps* through the *feed pipes* and *feed valves*. Any air or vapour pumped out is free to escape.

Make up Water, how obtained.—We see then that the same water is constantly being used over and over again. In practice, owing to waste at the safety valves, drain cocks, glands, etc., *make up* water has to be added occasionally. In the older ships this was taken from the sea, but in modern ships in which the supply of fresh water to the boilers is necessary, the *make up* is obtained from reserve fresh water tanks; or from sea water

Digitized by Google

by a process of *distillation*, usually effected by means of an *evaporator*.

This is a kind of boiler the heat for which is obtained from steam from the main boilers or from the exhaust. The steam passes through a series of tubes contained in a cylindrical shell and covered with sea water, which is thus made to boil, and the vapour given off is led to the main condensers, where it is turned into water and then pumped into the main boilers in the ordinary way; the heating steam also goes into the main condensers and returns to the boilers. The evaporator is fitted with a *brine* and *blow-out valve*, as an ordinary boiler, and is kept supplied with sea water by a special feed engine.

Changes in Water going from Boiler to Engines and back to Boiler.—The water in the boiler is converted into steam which goes through the *main stop valve* and *steam pipe*, and is supplied through *regulating valve* to *slide jacket*, *slide valve*, and *cylinders*, then the steam is turned back into water in the *condenser*, the *air pump* pumps it into the *feed tank*, from which the *feed pump* pumps it back through the *feed pipe* and *feed valve* into the boiler.

The JET CONDENSER is an alternative fitting for condensing steam, and is still sometimes used in ships making short trips where saving of weight is of importance and economy of fuel need not be considered: the jet being lighter than the surface condenser. As the steam leaves the exhaust pipe, it is led into a chamber, where it is met by a *jet* or spray of sea water which condenses it; and both the fresh and salt water fall to the bottom and are pumped away by the air pump.

The great objection to this system is that salt water has to be used to supply the boilers. From 30 to 40 lbs. of salt water are required to condense each pound of steam, the quantity varying according to the temperature of the sea; so the feed water cannot have more than 1 lb. of fresh to every 30 or 40 lbs. of salt water in its composition.

If the boilers are worked at three times the saltness of sea

Digitized by Google

water, a quantity of water equal to one-half of that evaporated has to be blown out, and about $7\frac{1}{2}$ per cent of the heat imparted to the water is thereby wasted. For this reason alone the *surface* condenser is much more economical than the *jet*.

Also with the present high pressures of steam, and with forced draught, the boiler plates would quickly become burnt if salt water was used to any extent, owing to impurities in the water other than salt, principally sulphate of lime, being deposited on the plates and forming a non-conducting *scale*, which would prevent the heat passing quickly enough through the plates to the water.

Digitized by Google

LESSON XXII

Expansion of steam; advantage of using high pressure steam expansively; *compound and triple expansion* engines.

Sketches and description of engines of H.M. ships *Sappho* and *Scylla*.

EXPANSION OF STEAM AND EXPANSIVE WORKING.—Steam is a *gas* or *elastic fluid*, so called because it has a tendency to *expand* or occupy a larger space. It expands according to Boyle's law: *the temperature remaining the same, the pressure of a gas varies inversely as the volume or space it occupies.* Owing to cooling and partial condensation during expansion, the pressure of steam falls below what it would be supposing no cooling took place. The cooling of the steam and its consequent condensation must always be taken into consideration.

Supposing steam of 60 lbs. *absolute* pressure (that is steam of 45 lbs. pressure above the atmosphere) were to be admitted into a cylinder during half the stroke of the piston, and the remainder of the stroke accomplished by the expansion of the steam; then, no cooling taking place, the pressure of steam at the end of the stroke would be 30 lbs. Its volume having been doubled, its pressure would be one-half the original pressure.

When speaking of the total heat of evaporation on page 186, we referred to the fact that steam of high pressure can be obtained with very little greater expenditure of heat than is necessary to obtain steam of low pressure, an instance being given. This is taken advantage of in the modern steam engine by using high pressure steam expansively.

Digitized by Google

Steam of high pressure may be admitted into a cylinder during a portion of the stroke of the piston, and then allowed to expand during the remainder of the stroke. If the *mean* or *average pressure* on the piston during the stroke be obtained, it will be found that the same number of units of work (p. 245) have been performed in moving the piston as if it had been moved by steam of a lower pressure admitted during the whole of the stroke.

So that the same work can be done by a *fraction* of a cylinder full of steam at a high pressure, as by a *whole* cylinder full at a lower pressure: and as the higher pressure steam costs little more to produce than the same weight of steam of lower pressure, it is evident that economy must result from its use; and that the higher the pressure of steam and the greater the expansion, the greater the economy will be.

In practice there is a limit to the pressure of steam used, but during the last few years, owing to the introduction of mild steel plates for boiler-making, better forms of furnaces, and other improvements, greatly increased pressures of steam have come into use with greater expansion and consequent greater economy in working.

A high rate of expansion may be carried out in a single cylinder by cutting off the supply of steam at an early part of the stroke; but it is found to be much more advantageous to carry out the expansion in *two* cylinders, with a low rate of expansion in each. An engine working in this manner is called a *compound engine;* the steam is first used in a *high pressure cylinder* with a low rate of expansion, and is then exhausted into a larger *low pressure cylinder*, also with a low rate of expansion. Each cylinder is usually fitted to work a separate crank, and the diameters of the two are so proportioned that the pressures on the cranks of the two engines, obtained by multiplying the areas of the pistons by the pressures of steam on them, may be as nearly as possible the same.

If we consider the changes which take place in the cylinder

Digitized by Google

of an ordinary or *simple* condensing engine working expansively, during an up and down stroke of the piston, we shall see a reason for the economy of the *compound* engine.

The supply of steam is cut off when a portion of the upstroke is completed, the steam then expands, and its pressure and temperature fall as the volume becomes greater; the metal of the cylinder also becomes cooler as it parts with its heat to the steam.

At the end of the upstroke, the exhaust port opens, and the lower part of the cylinder is put in connection with the condenser, and its temperature falls still farther in consequence during the downstroke. Then on the steam entering for the next upstroke it loses a great deal of its heat in warming up the comparatively cold cylinder.

In the *compound* engine, although the range of temperature in the two cylinders is the same as in the one cylinder, yet the range *in each* is less. The high pressure cylinder is never in connection with the condenser, so its lowest temperature is that due to the steam which goes from it to the low pressure cylinder, and the entering steam has only to warm the cylinder from this point. In the low pressure cylinder also, it will be seen that the range of temperature is reduced; so that the loss of efficiency from alternate heating and cooling is considerably less in the compound than in the simple engine.

Other advantages of the compound engine are that the stresses on the various working parts and fastenings of the machinery are much more uniform, owing to the expansion of the steam taking place in two cylinders, instead of being all carried out in one; and the pressures turning the cranks are much more uniform.

This will be readily seen by an example: supposing we wish to expand steam of 100 lbs. pressure 10 times in a single cylinder, we should have to cut off the supply at $\frac{1}{10}$th of the stroke, and the pressure per square inch on the piston would vary between 100 lbs. at the beginning of the stroke, and 10 lbs. at

Digitized by Google

Digitized by Google

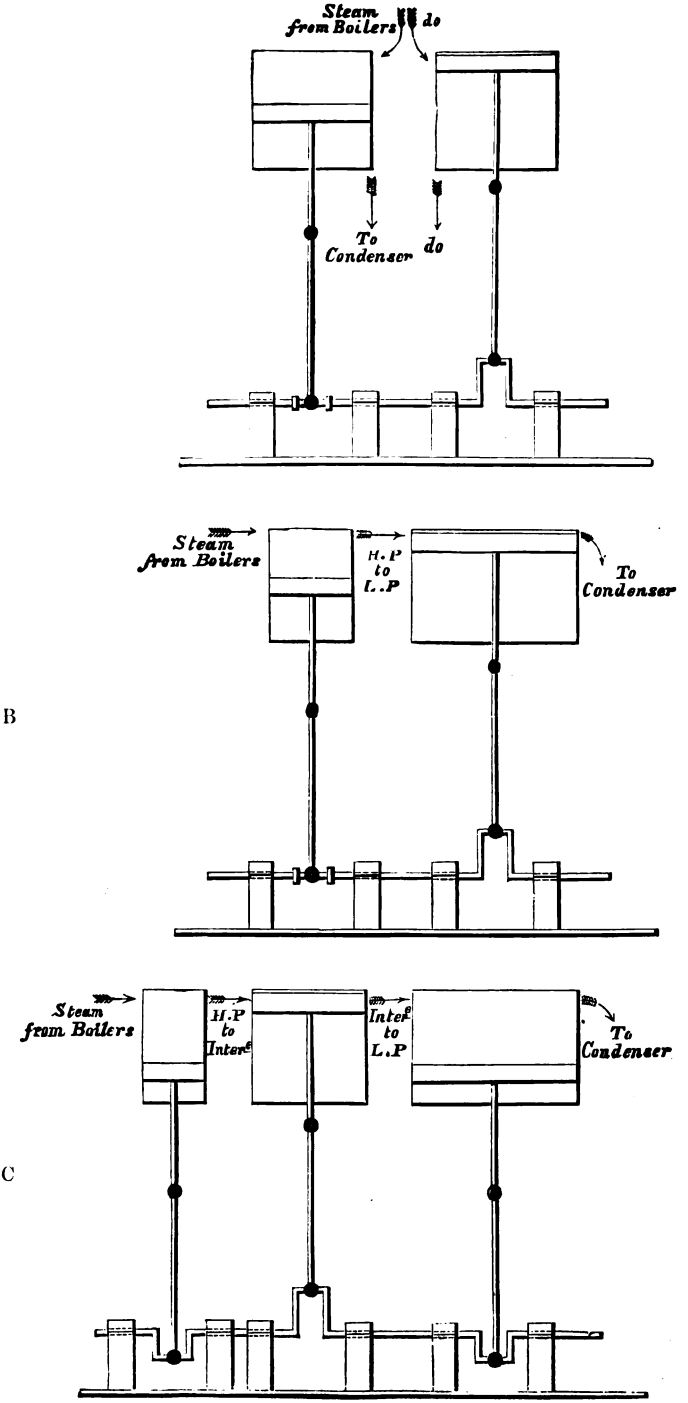

FIG. 97.—VARIOUS TYPES OF ENGINES. (*Outline.*)

Digitized by Google

the end; that is, the stresses on the working parts and fastenings would be ten times as great at the beginning as at the end of each stroke, and the forces moving the crank and propeller would also vary very considerably. If the steam were expanded in two cylinders it is very evident that these differences would not be so great.

Again, if the piston or slide valve of a simple engine were to leak, the steam would go directly to the condenser without doing any work: while if the high pressure piston or slide valve of a compound engine were to leak, this steam would still have to do work in the low pressure cylinder.

These advantages are carried still further in the *triple expansion engine*. In this the steam is first used in a *high pressure cylinder*, from that it goes to an *intermediate pressure cylinder*, then to a *low pressure cylinder*, and finally to the condenser. Each cylinder is fitted to work its own crank, and these are generally arranged on the crank shaft at an inclination of 120° to each other. A very evenly balanced engine is thus obtained.

In a compound engine with cranks working at right angles to each other, at one part of the stroke both pistons are going down and at another both are going up, but with three cranks at 120° the effort to turn the crank shaft and propeller is much more uniform.

Referring to Fig. 97, A shows a simple double cylinder engine, each cylinder taking steam direct from the boiler and exhausting to the condenser.

B shows a compound engine with a high and low pressure cylinder. Steam is taken from the boiler to the high pressure cylinder, thence to the low pressure cylinder, and thence to the condenser.

In some ships a modification of this type is fitted: in order to avoid the very large low pressure cylinder which would be necessary if only one was fitted, and to give a better balanced engine, two low pressure cylinders are supplied with a volume

Digitized by Google

equal to that of the one, so that there are three cylinders. The high pressure one is usually placed between the two low pressure.

C shows the simplest type of triple expansion engine. The steam from the boiler is taken to the high pressure cylinder, thence to the intermediate, thence to the low, and thence to the condenser.

Economy is thus attained in compound and triple expansion engines :—

Firstly, by using high pressure steam expansively.
Secondly, by avoiding the cooling caused by too great an expansion in one cylinder.
Thirdly, by avoiding greatly varying stresses on the working parts, and fastenings of the engines.
Fourthly, by reducing the loss due to possible leaks of pistons and slide valves.

The expansion of steam is carried out in *four* stages in the *quadruple expansion engines*, but very few of these have as yet been fitted in steam-ships.

During the last thirty years the pressure of steam used in steam-ships has been increased from 30 lbs. to over 200 lbs. per sq. in. ; and the consumption of coal now is from one-half to one-third of what it was then for similar powers, when the engines are working at fairly high speeds.

Description of Engines of H.M.S. "Sappho" and "Scylla."—We have now so far described the principal parts of Engines, that the two views of the triple expansion engines fitted to H.M.S. *Sappho* and *Scylla* can be fairly understood (Fig. 98). Twenty-nine ships of this class have been built under the Naval Defence Act of 1889 ; so that these engines are representative of a large number in the Royal Navy. They also represent fairly well many engines fitted to merchant ships.

The two ships named are twin-screw second-class cruisers, built in London and engined by Messrs. John Penn and Son. The ships are 300 feet long and 43 feet broad ; the engines

Digitized by Google

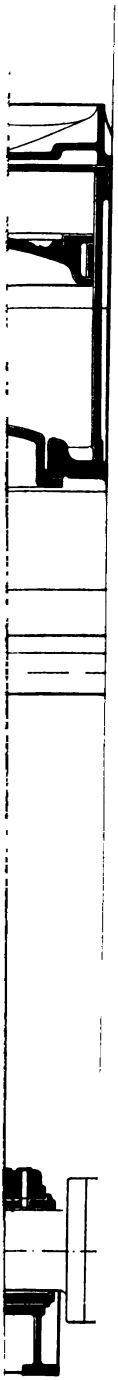

AND "S

Digitized by Google

Digitized by Google

develop a horse power of about 7300 with natural draught, and 9500 with forced draught, the corresponding speeds being about 19½ and 20½ knots respectively.

The sizes of the cylinders are:—high pressure, 33½ in. diam.; intermediate, 49 in.; low pressure, 74 in. Length of stroke of pistons 3 ft. 3 in.

These dimensions are of course exceeded in the engines of first-class cruisers and battleships developing up to 13,000 horse power: while in engines of third-class cruisers and gun-vessels the sizes are much less.

The high pressure cylinders are shown on the right, they are fitted with piston slide valves; the intermediate and low pressure cylinders with double ported flat valves; all the slide valves are fitted with balance pistons, as shown at the top of each.

The liners of the high and intermediate cylinders are made of steel, those for the low pressure are of cast-iron. All the cylinders are of cast-iron; the pistons, cylinder covers, slide covers, back columns, and bed plates are of cast-steel.

The crank shaft is hollow and made of steel; the three cranks are set at 120° apart.

The connecting rods are also made hollow, as shown in end elevation.

The condensers are made entirely of brass (they are not shown in the sketches); the tubes have a cooling surface of 10,000 square feet. The air pump of gun metal is shown in section in end view; it is worked by levers off the low pressure piston rod crosshead in each set of engines.

The five boilers are cylindrical return tube, three being double ended, 13 ft. diameter by 18 ft. 6 in. long; the other two are single ended, of the same diameter and 9 ft. 6 in. long,—these two smaller boilers are intended for use for auxiliary purposes in harbour instead of using the larger ones. The boilers are fitted with 24 Fox's corrugated furnaces, the grate surface is 590 sq. ft., the heating surface 15,770 sq. ft. The working pressure is 155 lbs. per sq. in.

Digitized by Google

The engines work at about 140 revolutions per minute at full speed; the vacuum maintained in condensers is 27½ inches.

The screw propellers are three bladed, made of gun metal, 13 ft. diameter, and 17 ft. 6 in. pitch.

The reversing gear is partly shown in end elevation, which is a section across an intermediate cylinder. The projections shown at the top of the cylinder are for longitudinal stays, which are fitted to brace the engines together and prevent vibration.

Digitized by Google

LESSON XXIII

Explanation of **Work** and **Horse Power**.—The Indicator and Indicator diagrams.

WORK AND HORSE POWER.—When a force is exerted through a distance, *mechanical work* is said to be done: and it is convenient to have some means of comparing and calculating amounts of work done. (See Aldous's *Physics*, p. 38.)

In this country, *work* is estimated by the number of lbs. avoirdupois raised through a number of feet.

The unit of work is the *foot pound.* In other words, *the exertion of a pressure of one pound through a distance of one foot is called a unit of work.*

If 10 lbs. pressure be exerted through 10 feet, or 1 lb. be exerted through 100 feet, 100 units of work are said to be done, and so on.

One *Horse power* is taken as *33,000 units of work done in one minute.*

It must be noticed that for WORK to be done, a force must be exerted through a *distance;* and the number of lbs. and the feet moved through have to be considered: for POWER, the question of *time* comes in, and the number of units of *work* performed *per minute* have to be considered.

Supposing a lift takes up 1000 lbs., 33 ft. high in one minute, one horse power would be exerted.

Applying this to the steam engine: if we take the mean or average effective forward pressure on the piston in lbs. per. sq. in.

Digitized by Google

throughout one stroke, and multiply by the area of the piston in sq. ins., we shall have the number of lbs. exerted. To find the space they are exerted through, multiply the length of stroke in *feet* by the number of revolutions per *minute*, and this by two, as there is an up and a down stroke in each revolution. The product will give us the number of foot pounds of work done in one minute. Divide by 33,000, and the result will be the horse power of the engine.

If there are two or more cylinders in the engines, the horse power of each must be found separately, and the results added together to obtain the total horse power.

A simple way to remember the rule for finding the horse power of an engine is as follows:—let

P = mean effective pressure on piston during the stroke in lbs. per sq. in.
L = length of stroke of piston in *feet*.
A = area of piston in sq. in. = (diam.)^2 × ·7854.
N = number of revolutions per *minute*.
Then indicated horse power of *each engine* = $\frac{2 \text{ P. L. A. N.}}{33{,}000}$
The word *plan* can be easily remembered.

THE INDICATOR.—The mean pressure on the piston is obtained from diagrams taken by means of an instrument called the Indicator, a description of which is now given, but as this forms no part of the steam engine, the article need not be read till the whole of the other lessons are understood.

The general features of the Indicator are as follow:—

A pencil is attached to the piston rod of a small piston which works up and down in a cylinder open to the air at the top and capable of being placed in connection with either end of an engine cylinder at the bottom. When in use the varying pressure in either end of the engine cylinder causes the small piston to move up and down, its motion being regulated by a spiral spring of known elastic force. As this is going on the pencil is pressed against a piece of paper fixed to a barrel or drum which revolves backwards and forwards coincidently with the motion

Digitized by Google

Digitized by Google

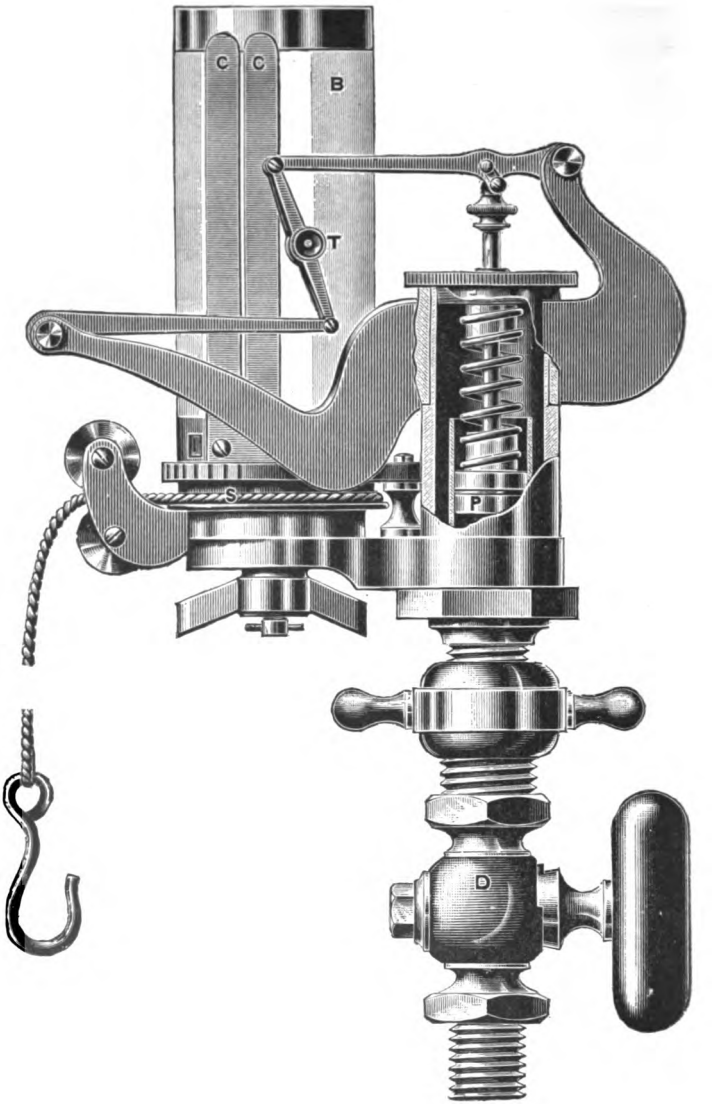

FIG. 99.—RICHARDS' INDICATOR (Half-size).

Digitized by Google

of the engine piston. Thus a diagram is traced out on the paper from which at any given point of the stroke of the engine piston the pressure of steam in the cylinder at that point may be obtained.

A very common type of Indicator in general use is that invented by Richards, shown in Fig. 99.

In this instrument, the weight of the piston, etc. and the stroke is made as small as possible, and the top of the piston rod is attached to one end of a parallel motion of light steel rods, in such a way that the motion of the pencil T is increased to about four times that of the rod; by this arrangement a correct record of the motion of the piston can be obtained and the difficulty of excessive vibration experienced with older forms of indicators is overcome.

The spiral spring has its bottom end secured to the piston P and its top end to the cylinder. It is convenient to use springs varying in stiffness according to the steam pressure used in the engines; thus one spring can be fitted allowing the pencil to move up or down 1 inch for every 10 lbs. pressure per sq. in. on the piston, others allowing the same movement for every 20, 40, 60 lbs., and so on; these are known as 10 lb., 20 lb., etc. springs.

The area of the piston of these indicators is usually half a square inch.

The barrel B, to which paper may be attached by the clips C, is given a motion in one direction, usually about 4 inches, by means of a string S led to a suitable position on a lever worked by the piston rod crosshead; the return stroke of the barrel is effected by means of a coiled spring inside it.

To take an indicator diagram, the indicator is fixed in place, the string for working the barrel is adjusted to give the correct travel, and a piece of paper is stretched around the barrel, its ends being held in place by the clips. Connection is then made to one end of the engine cylinder, say the bottom, the indicator cock D is opened and the indicator piston allowed to work a short time

Digitized by Google

to warm the necessary parts. This being done, the pencil is pressed lightly against the paper and the diagram made; the connection from the bottom of the cylinder is closed, that from the top is opened and a diagram made from it, then the cock is closed and the indicator piston will be only acted on by the pressure of the atmosphere; the pencil is now pressed on the paper and a horizontal *atmospheric line* is traced. The string is now disconnected from the part working it, the barrel comes to rest and is taken off the indicator, the diagram can then be removed from it, and others taken if necessary.

The theoretical form of indicator diagram taken from a cylinder exhausting to a condenser is shown in Fig. 100; here the vertical *admission line* on the left shows rise of pressure, the piston remaining still; when the piston begins to move, owing to the pressure acting on it, the horizontal *steam line* is formed; the supply of steam to the cylinder is cut off and the pressure falls as shown by the *expansion line.* At the end of the stroke the valve opens to exhaust, the pressure suddenly falls as shown by *exhaust line;* during the return stroke the end of the cylinder previously filled with steam is open to the condenser and the *vacuum line* is formed. At the end of this stroke steam is again admitted as shown by admission line, and these movements are repeated during each stroke of the piston. The *atmospheric line* is also shown.

Back Pressure.—There is always a certain amount of *back pressure* owing to resistance in the pipes and passages to steam leaving the cylinder, so that the vacuum shown in the cylinder cannot be so good as that in the condenser; also a perfect vacuum cannot be obtained in a condenser: the *zero line* is drawn on the diagram and shows the difference between the vacuum obtained in the cylinder and a perfect vacuum.

This diagram assumes: that the full pressure of steam acts suddenly on the piston at the beginning of the stroke; that this pressure remains constant up to the point of cut off; that the expansion is continued to the end of the stroke of the piston;

Digitized by Google

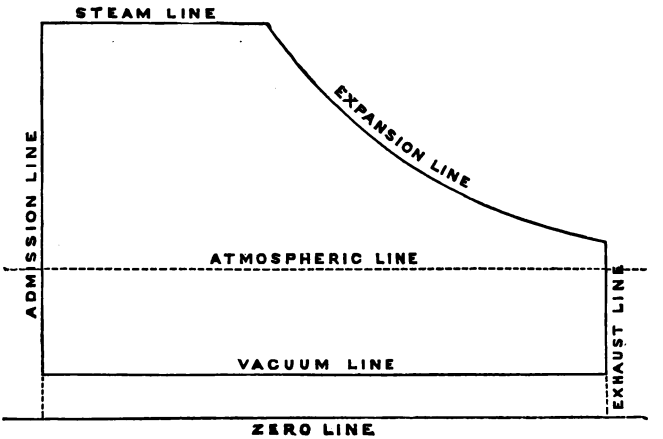

FIG. 100.—THEORETICAL INDICATOR DIAGRAM. (Page 250.)

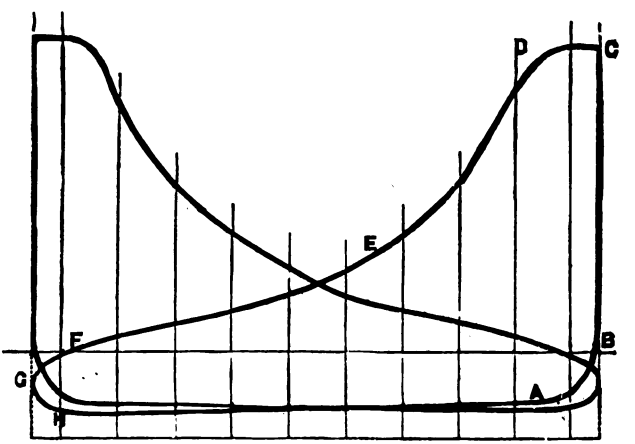

FIG. 101.—PRACTICAL INDICATOR DIAGRAM. (Page 253.)

Digitized by Google

Digitized by Google

that communication is suddenly opened to the condenser at the end of the forward stroke, the pressure falling at once in the cylinder, and that the cylinder is open to the condenser during the whole of the return stroke. In practice these conditions are not carried out, a diagram as commonly taken from an expansive condensing engine is shown.

The indicator diagram as formed practically is shown in Fig. 101. The steam pressure begins to rise at A just before one stroke of the piston is completed, due to compression of the steam in cylinder, owing to the passage for exhaust steam to the condenser being closed before the end of the stroke by the slide valve; at B the piston has come to the end of the stroke and the pressure rises to C through the slide valve opening and admitting steam. Here the piston commences another stroke, and the steam pressure is carried to near D, where it is cut off and the pressure falls to E and F; here the opening to exhaust begins and the pressure has fallen to G at the end of the stroke of the piston; it continues to fall to H after the piston has begun the next stroke, and continues low till A, where the pressure rises again as before. The diagram taken from the other side of the piston and the atmospheric line are also shown. When taken off the barrel, the diagram has the steam pressure and vacuum as shown by gauges marked on it, also the number of revolutions of engines, strength of spring used, date, etc.

In order to obtain the mean pressure from these diagrams they are divided into ten parts, as shown by the vertical lines; then the pressure represented on the diagram from either side of the piston can be found at each line by comparing its length with a scale graduated to correspond with the strength of the spring used. These are added together and divided by 10; this gives the mean pressure on one side of the piston, the mean pressure on the other side is obtained in the same way, and the mean of the two is the *mean pressure* acting on the piston during the revolution which is used in calculating the indicated horse power.

Digitized by Google

Other Uses of Indicator Diagrams.—Besides being used for obtaining the power of the engines, the indicator diagram gives much other information as to the working of the engines, making it an invaluable instrument to the engineer. It tells if the admission of steam is early or late, whether the pressure is well maintained till the supply is shut off, the part of the stroke of the engine piston where the slide valve cuts off the steam, whether the cut off is sharp or gradual, at what point the steam is admitted to condenser, the amount of vacuum in the cylinder, the amount of back pressure, the amount of compression at the end of each stroke, whether the pistons or slide valves are leaking, etc.

In order to ensure an equal distribution of work in each cylinder of a triple or quadruple expansion engine, separate linking-up gear is fitted to each slide valve so that each link may be "linked up" or shortened independently of the others.

By this means the travel of each slide valve and the expansion of steam in each cylinder are regulated, so that each should give the most efficient Indicator Diagram.

Digitized by Google

Digitized by Google

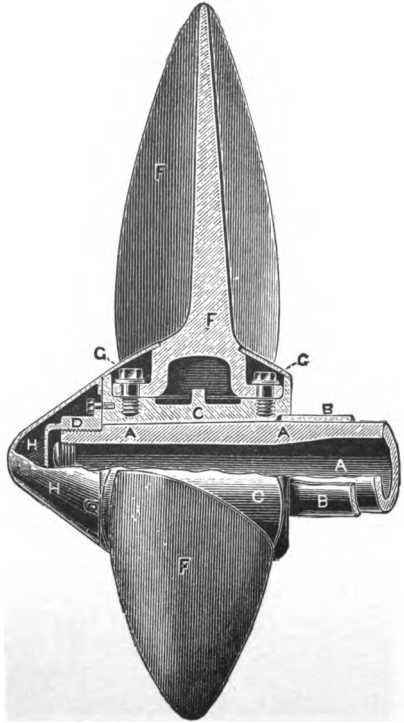

SECTIONAL ELEVATION.

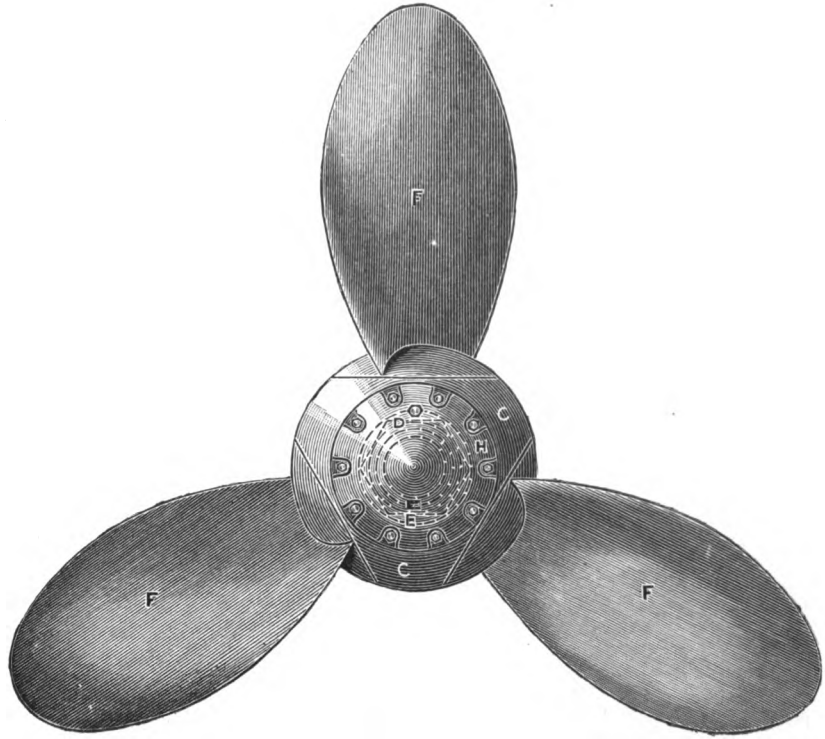

END ELEVATION, LOOKING FORWARD.

FIG. 102.—SCREW PROPELLER.

Digitized by Google

LESSON XXIV

Propulsion by Screw Propellers.—Sketch and description of *screw propeller*. Sketch and description of *thrust bearing*. Meaning of *pitch* and *slip*. Advantages of *twin screws*.
Efficiency of the Marine Steam Engine.

THE SCREW PROPELLER.—This propeller is now invariably used for ships of war, and ocean steam-ships generally. Various kinds of screw propellers have been tried, but the form found to give most satisfactory results, and which is now fitted to most modern ships, is that shown in Fig. 102. All parts of the propellers used for H.M. ships are made of gun metal. Blades of cast-steel or of manganese bronze are often used for mail steamers, and propellers of cast-iron in one piece are commonly used for ordinary merchant steamers. Propellers with two blades are used when it would be necessary to raise or feather them, and in some cases four-bladed propellers are used.

Referring to Fig. 102, A is the hollow steel *propeller shaft* cased with gun metal to protect it from oxidation, as shown at B. The three blades F are secured to the central part or *boss* C by *bolts* G, as shown in the sectional view. The bolt holes are elongated, so that the blades may be moved round on the boss a small amount, if necessary, to alter the pitch.

The boss is made spherical, so that it may revolve freely in water, and is fitted to the tapered end of the shaft, being held in place by the *nut* D, and prevented from turning on the shaft by the *sunk key* shown at E in end view. A plug is screwed or driven tightly into the end of the hollow shaft.

Digitized by Google

The heads of the bolts G securing the blades are held in place by guards not shown in sketch, and covered by curved plates screwed to the boss so as to preserve its spherical form. The after end of the boss is fitted with a conical *cap* H ; this gives a free run to water passing the screw and prevents the churning action which would be set up by the flat sides of the hexagon nut D.

The propeller with its three blades forms part of a large *three-threaded screw*, that shown in sketch is *right-handed*, and is fitted to drive the ship ahead when revolving in the same direction as the hands of a clock. The *driving faces* of the blades which act obliquely on the water when the screw revolves ahead are parts of *true screw surfaces:* the necessary thickness of metal to give sufficient strength to the blade is at the back.

If we imagine water to be solid and unyielding, and the screw to be revolving in the ahead direction in it, the water will form a nut in which the screw, if free to move in the direction of its axis, would advance the amount of its pitch during each revolution. In advancing, the screw shaft also would advance, and would give a forward thrust to anything which opposed its motion.

In a ship the thrust from the screw propellers when moving ahead or astern is transmitted to the ship to give her the required motion by the *thrust bearings*, which are very firmly secured to the framing.

Two sectional views of a thrust bearing are given in Fig. 103. The propeller shaft A is provided with a number of rings or *collars* B formed solid on it, these collars fit freely between spaces formed by the gun metal rings C, which fit securely into grooves turned in the bearing D and in the cap E. These rings are put in in halves and may be renewed when worn ; *liners* are fitted between the two parts of the rings and held by the bearing, these prevent the rings revolving. An arrangement for oil lubrication is shown at F, and holes for a supply of water if necessary at H.

Now as the shaft A revolves, the thrust in it either ahead or astern is transmitted by the collars B to the rings C and bearing D, and so to the ship.

Digitized by Google

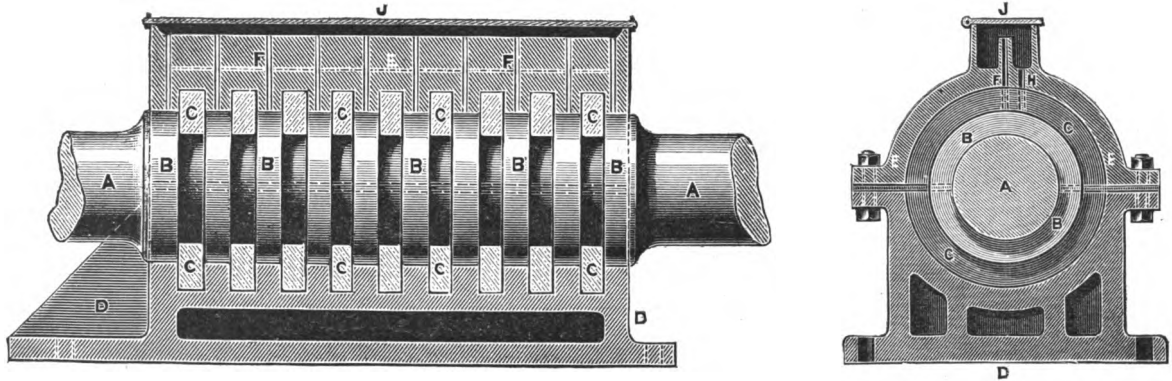

SECTIONAL ELEVATION.

TRANSVERSE SECTION.

FIG. 103.—THRUST BEARING.

Digitized by Google

Digitized by Google

Different engine makers supply thrust bearings differing in their details, but the principle is the same in all.

PITCH.—*The pitch of a screw propeller is the distance between two complete turns of the same thread, measured on a line parallel to the axis.*

It is evidently the amount the ship would advance in one turn of the screw supposing it worked in a solid medium; since water yields somewhat the ship does not advance this amount.

The distance the screw advances per hour, or the distance the ship would advance supposing the water were solid, is obtained by multiplying the pitch of the screw in feet by the number of revolutions of the screw per *hour*, and dividing the product by 6080, the number of feet in a nautical mile.

For example: supposing the pitch of a screw propeller to be 12 feet, and the number of revolutions per *minute* to be 152; then the speed of the screw will be:—

$$\frac{12 \times 152 \times 60}{6080} = 18 \text{ knots per hour.}$$

SLIP.—*The difference between what the ship should advance due to the speed of the screw and what she actually does advance is called the "slip" of the screw.*

Slip is usually calculated as a percentage of the speed of the screw. To illustrate this by an example: supposing the speed of the screw of a ship to be 20 knots and the speed of the ship 18 knots; required the slip per cent.

Here the slip in 20 knots is 2, the slip per cent will be given by the proportion

$$2 : 20 : : \text{slip} : 100 = 10.$$

FEATHERING SCREWS.—Formerly, ships of war with both steam and sail power had their propellers made with two blades, and fitted so that they could be raised out of the water when the ship was under sail alone, so as not to check her way.

There were many disadvantages in this plan, and the method now adopted in such ships is to arrange the two propeller blades so that they can be *feathered*, that is, placed in a fore and aft

Digitized by Google

direction. This is effected by means of a bar passing through the hollow stern shaft to the inside of the ship, which can be made to act on arms fitted to the blades inside the boss, and so alter their position as necessary.

Twin Screws.—All our modern ships of war and many mail steamers are fitted with twin screws; which are so arranged that the tops of the blades turn *outwards* when driving the ship ahead. In this case the starboard screw must be *right-handed* and the port screw *left-handed.* They are driven by distinct sets of engines.

Twin screw ships have many advantages over those fitted with single screws, among which are:—

1st. If one set of engines were to break down the other would still probably be available for use, it being most unlikely that both sets of engines would be disabled at the same time. The loss of speed when working with one screw is not very great.

2nd. The ship may be much more easily handled, as she can be turned in a very small circle by going ahead with one screw and astern with the other.

3rd. One set of engines may be put in a compartment separate from the other; consequently if one engine compartment was flooded, or filled with steam, the other set of engines might still be used.

4th. If the rudder was disabled, the ship might, to a great extent, be steered by her screws.

There are several other advantages, but these are sufficient to show the great superiority of twin screws for propulsion.

This duplicating arrangement has been carried a step further in H.M. ships *Blake* and *Blenheim,* which, in addition to twin screws, have two sets of triple expansion engines in the same fore and aft line to drive each screw, the after set on either side being used to work the screws for cruising speeds, both sets being connected and worked for high speeds. Triple screws have been fitted to some foreign men-of-war; the middle screw being used for slow speeds, the outer screws for higher speeds, and the whole three for full speed.

Digitized by Google

EFFICIENCY OF THE MARINE STEAM ENGINE.—In conclusion we will consider very briefly the efficiency of the marine steam engine.

In every engine or machine, a certain quantity of *energy* or power of doing work must be expended in order that a certain amount of work may be done: the work done being equal to the energy expended. But only part of that work is *useful*, the remainder being *useless*, so that the energy expended in doing it is wasted. For example: in steam pumping engines the useful work is that done in raising a certain amount of water to a certain height in a given time; the useless work is that expended in overcoming the friction of the parts. The proportion which the useful work done bears to the energy expended is called the *efficiency*. If we imagine a machine in which the useful work done is equal to the energy expended the efficiency would be represented by unity,

$$\text{or} \qquad \frac{\text{work done}}{\text{energy expended}} = 1$$

In every actual machine the efficiency is represented by a fraction which falls short of unity by an amount corresponding to the energy wasted. In the marine steam engine there are four successive causes of waste of energy.

Firstly, the whole of the energy which the fuel is capable of producing by its combustion is not communicated to the water in the boiler, but only a certain fraction of that energy, about six-tenths; this is called the *efficiency of the boiler*. The amount by which it falls short of unity corresponds to the heat lost by imperfect combustion, by conduction and radiation, and by the high temperature at which the furnace gases escape through the funnel.

Secondly, the whole of the energy which in the form of heat is communicated to the water in the boiler so as to raise its temperature and convert it into steam, is not obtained in the form of *mechanical work* done by the steam in driving the piston. The work done corresponds to a quantity of energy

Digitized by Google

which has been changed from heat to work, being the difference between the heat brought by the steam from the boiler, and the heat carried away by the same steam when it leaves the cylinder. That difference is but a small fraction of the whole heat brought by the steam from the boiler, as a large amount of heat is taken to the condenser and consequently wasted. This fraction, say one-tenth, is called the *efficiency of the steam.*

Thirdly, the whole of the energy exerted by the steam in driving the piston is not communicated to the propeller, for a fraction of that energy, perhaps about one-eighth, is wasted in overcoming the friction of the various parts of the engine: the difference between that fraction and unity being the *efficiency of the mechanism.*

Fourthly, a fraction of the energy remaining to work the propeller is wasted in agitating the water in which it works, the remainder only being usefully expended in overcoming the resistance of the vessel and driving her ahead: the fraction which this is of the energy expended by the engine is called the *efficiency of the propeller.*

The efficiency of the steam engine as a whole is made up of the product of the four fractions; efficiency of boiler, of the steam, of the mechanism and of the propeller, so is evidently only a small fraction of the whole energy which might be obtained from the fuel consumed.

The object of improvements in the economy of the marine steam engine is evidently to increase as far as practicable each of the four factors of the efficiency.

We have now dealt with the principal parts of boilers and engines in a very elementary manner, and we strongly recommend those who are interested in the study of the Marine Steam Engine, to read the excellent work on the subject by the late Mr. R. Sennett, who was at one time Engineer-in-Chief of the Royal Navy; or that by Mr. A. E. Seaton, also at one time a Naval Engineer.

Digitized by Google

SHORT DESCRIPTION

OF THE

CONSTRUCTION OF A BATTLESHIP

Digitized by Google

Digitized by Google

SHORT DESCRIPTION

OF THE

CONSTRUCTION OF A BATTLESHIP

WE propose in the following pages to give a brief description of the method of construction of a Battleship, with the names and uses of the various parts of the hull.

As the sizes and types of our battleships vary so considerably we shall endeavour to give a simple description; leaving it to those interested to make further study of the details of ships which they may have an opportunity of seeing completed or in process of construction.

The principal particulars of our first-class battleships are—length 320 to 380 feet, breadth 62 to 75 feet, mean draught 26 to 28 feet, displacement or weight 9000 to 14,000 tons, indicated horse power 8000 to 13,000, speed 16 to 17½ knots.

The material principally used is mild steel made by the Siemens-Martin process (p. 17). It has an ultimate tensile strength of 26 to 30 tons per square inch.

When the design of a ship has been completed at the Admiralty, the drawings (which are usually on a scale of one quarter of an inch to a foot) are sent to the building yard. The most important are:—

The *sheer plan*, showing all lines of length and height from stem to stern; looking at the ship's side.

The *body plan*, showing all the lines of breadth and height,

Digitized by Google

and representing half athwart-ship sections of the ship at various places; those of the *fore body* or fore part of the ship on the right-hand side of the middle line, and those of the *after body* on the left-hand side.

The *half breadth plan*, showing the lines of length and breadth; these are the lines which would be seen when looking down on the ship from an elevation.

The *profile*, showing position of funnels, masts, gun and torpedo ports, hawse pipes, etc.

The *midship section*, and other detail drawings showing sizes of plates, angle steels, etc.

From the *sheer*, *body*, and *half breadth plans*, other drawings are made full size on the floor of a large room called the *mould loft*: these enable each part to be clearly and correctly shown, irregularities, not noticed in the small scale drawings, to be put right, and the various necessary measurements to be accurately made. A *half block model* of the ship (that is a model of the ship lengthways, but only one half of the breadth) is also usually prepared, on which the arrangement of the plates and the disposition of their edges and butts are shown. By these means the plates, etc., can be ordered from the makers very nearly the size they will be required for the ship, they being cut exact during the building.

The full-sized drawings of the *body plan* on the mould loft floor are transferred to another smooth surface of boards called the *scrive board*; and from this third series of drawings, *moulds* are made of iron bar to the exact curvature of the various frames, etc., for the smiths to bend them on the slabs.

The plates, angle steels, etc., of which the ship is to be built are supplied in straight lengths from the steel works, and have to be bent to the necessary shape, drilled, etc. Machinery is used to a great extent for doing this.

Some of the parts can be bent cold, but for a great number the steel has to be made red hot in special furnaces and drawn out on to a level floor made of slabs of cast-iron, in which are

Digitized by Google

numerous holes for the insertion of iron pegs or *dogs*. On this floor the frames, etc., are bent to the moulds, the dogs being used to keep them in their proper position. When cold they are compared with the lines on the scrive board and any deviation corrected.

The usual measurements are made in feet, inches, and fractions of an inch, but the thickness of plates is often estimated in pounds to the square foot. Remembering that a cubic foot of steel weighs about 490 pounds, a piece of steel plate 1 inch thick can be spoken of approximately as *40 pound* plate, ½ inch plate as *20 pound*, and so on.

Ships are built on *slips*, or in *docks*. In either case suitable *blocks* have to be prepared on which to lay the keel. The blocks are made in pieces so that they can be readily removed when necessary.

If the ship is to be built in a dock, the line of the tops of the blocks is level; and when the ship is sufficiently advanced, water can be let into the dock and the ship *floated out*. But if built on a slip, the line of the tops of the blocks slopes towards the water so that the ship can be *launched* when ready. In this case *launching ways* have to be prepared when the hull is nearing completion; these are built of wood along the slip on each side of the blocks, and temporary wooden structures called *cradles* are fitted under the ship. When all is ready for launching, the weight of the ship is taken off the blocks and shores supporting her, and transferred by the cradles to the well-greased *ways*, down which the vessel slides into the water stern first.

When the various parts required in the early stages of building are prepared, by bending them to the required shape and by drilling and riveting together the parts that can be dealt with more conveniently in the shops than in place, the construction is proceeded with.

THE OUTER KEEL PLATES are first put in place on the blocks. These are of steel about ¾ or ⅞ inch thick, 4 feet wide, and 16

Digitized by Google

feet long. They extend nearly the whole length of the ship: at the fore and after ends they are gradually bent up to a ⊔ shape, flat at the bottom so that the weight of the ship will be distributed over as large an area as possible when on the blocks or in dock. The extreme ends are riveted to the stem and stern posts as hereafter described.

THE INNER KEEL PLATES are laid on the top of the outer keel plates. They are about ½ to ⅝ inch thick and 16 feet long, but some inches narrower than the outer keel plates, in order to allow for the lap of the first strakes of bottom plating necessary for riveting. The *butts* or ends of the plates forming the flat inner and outer keels are spaced as far apart as possible, and are both connected by *butt straps* as wide and as thick as the plates themselves. These straps are of course on the top of the inner keel, and the rivets go through the three thicknesses, and are countersunk outside.

VERTICAL KEEL.—This is fitted along the middle of the inner keel, and consists of continuous plates about ½ inch thick, 3 feet 2 inches high and 16 feet long, fastened together by double butt straps, and to the outer and inner keels by double angle steels. It extends fore and aft the ship, secured at the fore end to the stem, and aft to the stern post. In the latest ships, which have their magazines between the engine and boiler rooms, the vertical keel is about 6 feet deep, and is not water-tight.

TRANSVERSE FRAMES.—After the outer, inner, and vertical keels are fastened together, the lower parts of the *transverse frames* or *ribs* are riveted to them. These are built up in lengths called *bracket frames*, which are made of four short lengths of angle steel to which are riveted the *bracket plates*. The transverse frames are from 2 feet 6 inches to 3 feet 2 inches in depth amidships; they are usually spaced about 4 feet apart and have numbers or *stations* given them from

Digitized by Google

forward, aft; by which means any position in the ship's length is easily referred to. For *water-tight frames*, which are spaced about 20 feet apart, each bracket frame is formed of a piece of steel plate, with angle steel running the whole way round it and carefully caulked.

LONGITUDINAL FRAMES.—The first series of brackets of the transverse frames being riveted to the keel plates on both sides, the first *longitudinal frame* is fastened to their outer ends. These frames extend nearly the whole length of the ship, and consist of plates about $\frac{1}{2}$ inch thick, 24 feet long and 2 feet 6 inches to 3 feet 2 inches wide amidships, becoming narrower at the bow and stern. Angle steels are riveted to the tops and bottoms of the longitudinals, so that the bottom plating can be afterwards riveted to them, and the corners of the brackets are cut off to clear these angle steels.

The second series of brackets, one on each side of the ship, are then riveted to the first longitudinals; next the second longitudinals to the second series of brackets, and so on. This system of construction is carried to within 5 or 6 feet of the water line, the longitudinals gradually changing from a vertical to a horizontal position as the transverse frames change from the horizontal position to the vertical.

The last longitudinal that is built in, forms a shelf on which the backing and armour are afterwards placed; this is called the *armour shelf*. The number of longitudinals from the vertical keel to the armour shelf is often five; one of these, in some cases the third from the keel, is made continuous and water-tight; the others being lightened by holes cut in them. The vertical keel is sometimes made continuous and water-tight also. In some ships six longitudinals are fitted, the second and fifth being made water-tight. In the new first-class battleships, the vertical keel is not water-tight, but the first, third, and fifth longitudinals from it are, and the fifth longitudinal from the keel is the armour shelf.

Digitized by Google

In the fore and aft parts of the ship, the number of longitudinals is in some cases reduced, as there is no necessity for so many as in the middle of the ship.

The frames are held in place temporarily amidships by pieces of wood bent to the proper form of the ship called *ribbands*, and at the ends by pieces of wood trimmed to the proper curves called *harpins;* these are removed as the frames are securely fixed in place and held by deck beams, bottom plating, etc.

STEM.—The stems of battleships are now made of castings of steel of hollow section. The bottom part is formed with recesses to take the ends of the keel plates, which are fastened to it by screw or tap rivets, and the sides are also recessed to take the ends of the outer bottom plating which is screw-riveted to it. The fore part of the stem forms the *ram*.

THE STERN POST is also a steel casting. Its bottom part is formed to take the after end of the keel plates; its head is securely attached to the frames, and its sides are recessed to take the ends of the outer bottom plating, which is secured to it by screw rivets. On the after side of the stern post the *braces*, to which the rudder is hung, are formed; these are bored accurately in line with each other to take the *pintles* of the rudder.

OUTER AND INNER BOTTOM PLATING.—When a sufficient number of the frames are erected, the plates forming the outer and inner bottoms are put in place and riveted to them, the plates having first been bent to the proper shape and drilled as necessary.

THE OUTER BOTTOM PLATING is made up of plates about $\frac{1}{2}$ to $\frac{5}{8}$ inch thick, 12 to 16 feet long, and 3 to 4 feet wide, becoming narrower at the ends of the ship. One edge of the first width or *strake* of plates on both sides, called the *garboard strake*, laps over the top of the upper edges of the outer keel plates sufficiently to allow of a double row of countersunk rivets being put in. The rivet heads are inside the ship, and the points are countersunk outside, so that the riveting when finished is flush

Digitized by Google

with the plates. The ends or *butts* of the outer bottom plates are fastened to each other by *butt straps*, or covering plates, placed on the inside of the ship, and double rows of countersunk rivets connect each to the butt strap.

This strake of plating is carried fore and aft the ship on each side, and is riveted also to the bottom angle steels of the transverse frames. The fore end terminates at the stem, fitting into a recess formed in its side and screw-riveted to it; the after end is similarly fastened to the stern post.

The lower edges of the plates forming the second strake are fastened to the bottom of the outside edges of the first strake on each side of the ship by double riveted lap joints, and this strake is also carried fore and aft, and secured to the stem and stern post. The plates of this strake are also riveted to the bottom angle steels of the transverse frames, and to the bottom angle steels of the longitudinal frames they may cover.

There are narrow spaces left between every alternate strake of plating and the angle steels of the frames, due to the thickness of the plates lapped over; these are filled in with strips of plate called *liners;* the rivets through the plates and frames pass through the liners also. At water-tight frames a weakness would occur unless provided for, because the lines of rivets run right round the ship here, and the rivets must be closely spaced together so that the joints may be properly caulked without the plates yielding. The liners are made wide at these places and act as butt straps to connect the plates on both sides of the frames and so give additional strength to the ship.

The other strakes of the outer bottom plating are built up in a similar manner; they are usually lettered from the keel upwards, the first strake being called the *garboard* strake, the second B, the third C, and so on up to the armour shelf.

A double thickness of plating is worked over the bows to strengthen the ship for ramming and to take the rub of cables; the fore end of this fits into recesses formed in the sides of the stem. Strong plating is also worked in the vicinity of the

Digitized by Google

propellers and shafting. Horizontal *spurs* are usually fitted, one on each side of the ram, to strengthen it.

THE INNER BOTTOM PLATING extends about two-thirds the length of the ship; it is made up of strakes of plates about $\frac{3}{8}$ to $\frac{1}{2}$ inch thick, 16 feet long, and 3 to 4 feet wide. The middle of the first strake is riveted to the two angle steels running along the top of the vertical keel, one on each side. A strake of plating is riveted to this and to the framing on both sides in a similar manner to the outer bottom plating, other strakes to these, and so on up to about the height of the fourth longitudinal from the keel. In the latest ships the strakes of inner bottom plating are worked like the planking of a *clinker-built* boat. This is to prevent water lodging at the edges of the plates; taper or wedge shaped liners would be used in this case.

Joints of plates, etc., come very close together, but are made perfectly water-tight by *caulking*, or driving in the edges of the plates with a blunt-pointed chisel, so that no water can leak through.

DOUBLE BOTTOM.—The space between the outer and inner bottoms, about $2\frac{1}{2}$ to $3\frac{1}{4}$ feet in depth, according to the depth of the frames, is called the *double bottom*. This is of great advantage as regards the safety of the ship, for besides the strength given by the two separate thicknesses of bottom plating with the frames between them, there is great probability that supposing the outer skin were damaged, the inner skin would prevent water entering the ship. The cases of H.M. ships *Apollo* and *Naiad* are illustrations of this, their outer bottom plating was most severely damaged during the 1892 manœuvres, but the inner bottom plating remained sound.

By means of the *water-tight frames*, the *vertical keel*, and *third longitudinal* (if so fitted) being made water-tight, the double bottom is divided into several water-tight compartments; so that any water entering through damage to the outer skin would be confined to a comparatively small space. Water may

Digitized by Google

also be run into the double bottom compartments if necessary to alter the trim of the ship, or fresh water carried for use in boilers. *Manholes* fitted with doors are provided to allow of access to the double bottom.

ARMOUR SHELF.—The longitudinal forming the armour shelf is fitted to receive and support the armour plates, backing, and framing inside the backing. It has to be made wider than the other longitudinals for this purpose, and it extends this amount into the interior of the ship, the tops of the frames under it being curved inwards to support it.

The number of frames above the armour shelf behind the armour is double that below, an additional frame being worked between the continuations of the lower ones to give greater support to the armour. These frames are secured to the armour shelf and extend upwards to the height at which the *armour deck* is to be fitted. In the newer ships this is about three feet above the water line, amidships, and forms the main deck; before and abaft this it is below the water line and forms the lower deck.

If the ship is to be fitted with a complete belt of water-line armour, the armour shelf extends fore and aft the ship; but if the ends are to be unarmoured, there is no necessity for it beyond the water-line armour, and ordinary Z bar frames are fitted, with one bracket plate at the heel of each to connect to vertical keel, and a bracket plate at the top or head to support the armour deck.

When the frames above the armour shelf are riveted in place, they are covered on the outside with two thicknesses of steel plating, to which the armour plates are afterwards bolted.

DECK BEAMS.—These are of mild steel rolled to a T or ⅂ shape, with a *bulb* or enlargement at the bottom of the vertical *web*, and made to the dimensions necessary to support the loads that will be placed on them. Their ends are made deeper than the remainder so that they can be securely riveted to the trans-

Digitized by Google

verse frames on both sides of the ship. Those beams which cross the ship in the line of hatchways must necessarily be cut, but their ends around the hatchways are fastened together and secured to the whole beams at each end, so that as little strength as possible is lost. The beams that will have heavy weights placed on them are often supported by hollow *pillars* or *stanchions* running down from deck to deck to the bottom of the ship and secured to the vertical keel, etc. Deck beams are built into the ship to support the *lower*, *main*, *upper* and *spar* decks, and in some cases the partial decks or *flats*.

THE ARMOUR DECK usually extends the whole length of the ship near the water line. Amidships it is in some cases about three feet above the water line, secured to the deck beams, and its edges are rabbeted or recessed into and tap-riveted to the top edges of the armour plating after it is fitted in place. It serves here to protect the engines, boilers, and magazines, and forms the *main deck*. Before and abaft the armour bulkheads forming the ends of the citadel, it is well under water, and forms the *lower deck*. At the extreme fore and after ends it slopes downwards, the fore part tending to strengthen the bows for ramming, and the after part to protect the steering gear. In the newer ships this deck is of two thicknesses of $1\frac{1}{2}$ inch steel plates. *Armour gratings* are in some cases fitted over engine and boiler hatches, etc., to keep out shells, etc., and yet allow for the passage of air.

The other decks are fitted when the framework and beams are ready to receive them. Where necessary a deck of steel plates about $\frac{1}{4}$ to $\frac{1}{2}$ inch thick is first laid over the beams to give longitudinal strength to the ship; and in parts, such as the crew spaces, wood planking is laid down over the steel decks and bolted through to the plates between the beams. If there is no steel deck the wood deck is bolted to the beams.

In turret ships that part of the upper deck through which

Digitized by Google

the turret passes is usually of thick steel plates, which serve as a *glacis* to protect the base of the turret.

A *Débris Deck* is in some cases fitted under the armour deck at the tops of the boilers, to protect them from falling splinters, etc.

BULKHEADS.—The inside of the ship is divided transversely and longitudinally into several compartments by means of *water-tight bulkheads*. These serve to strengthen the ship in both directions; and by forming a large number of subdivisions provide against a probability of the ship sinking in the event of being injured below the water line. They also enable the boilers to be arranged in completely separate stokeholds, and the propelling machinery in separate engine rooms.

Bulkheads usually extend some distance above the water line, and are made of steel plates about $\frac{1}{4}$ to $\frac{3}{8}$ of an inch thick, stiffened by L, T, and Z steel bars.

Beginning with the *transverse bulkheads:* these are lettered from forward; some are complete and extend the whole width of the ship, others are partial only. About eleven complete bulkheads are fitted, those over the double bottom are built on to and carried up from the inner bottom in line with the water-tight frames from the outer bottom. Before and abaft the double bottom these bulkheads are carried up from angle steels on the outer bottom plating. The first or A bulkhead is placed a few feet abaft the stem and is called the *collision bulkhead*, and the space forward of it is called the ram compartment. From the fore part of this bulkhead, two or more tiers of horizontal plating are built into the ship to support the stem and bow plating for ramming; these are called *breast hooks*. Other transverse bulkheads form the divisions which separate the boiler rooms, engine rooms, magazines, etc., athwart-ships. The most important bulkheads are built up to some distance above the water line, and usually terminate at a deck.

LONGITUDINAL BULKHEADS are built into the ship and form

Digitized by Google

the fore and aft divisions of the engine and boiler rooms, etc. We before stated that in some cases the inner bottom plating stopped at the fourth longitudinal frame from the keel. The inner bottom above this is formed by fore and aft *wing passage bulkheads* on both sides. The most important fore and aft bulkheads extend above the water line in the same manner as the transverse bulkheads, so that although a ship may be sunk deeper in the water than the usual draught owing to a compartment being filled, water could not flow over the top of a bulkhead and into the next compartment and so fill the whole ship.

The space between two transverse bulkheads, say from A to B, is known by the two letters, AB.

Besides the *complete* bulkheads carried to above the water line, *partial* bulkheads are built into the ship and form coal boxes or *bunkers*, magazines, store rooms, etc. At the fore and aft ends of the ship partial decks are formed for store rooms, etc., and are called *flats*. The total number of water-tight compartments is considerably over one hundred; several of them might fill without affecting the safety of the ship, provided they were not so situated as to cause the ends to be submerged, or the ship to capsize.

WATER-TIGHT DOORS, ETC.—To allow of communication between the several compartments, openings are made where necessary, which may be closed at pleasure by means of hinged or sliding doors, which are made to fit over the openings, so as to allow no water to pass through.

Hatchways near and below the water line are usually fitted with hinged flap doors made water-tight with india-rubber, which may be closed if necessary to prevent water passing either way.

COFFER DAMS.—Two thicknesses of steel plate, stiffened as necessary, are built around hatchways in decks near the water line, and are carried up some feet above it, with a space of about a foot between them.

These form *coffer dams*, their object is to provide a ready

Digitized by Google

means of checking the flow of water into a ship if struck by a projectile near the water line.

It would be very difficult to stop a ragged hole in a single thickness of plate; but by having two, and filling the space between them with canvas, oakum, etc., a flow of water into the ship could be much more easily checked.

AIR LOCKS are fitted to stokehold bulkheads to allow of passage to or from them when the boiler furnaces are being supplied with air by forced draught. An air lock consists of a box having two doors; in entering or leaving a stokehold through it, one door must be shut before the other is opened to prevent loss of air pressure.

ENGINE BEARERS are platforms built into the ship's framing in the engine compartments to which the bed or foundation plates of the engines are firmly bolted. It is also necessary to make supports for the shaft bearings, especially for the thrust bearings where the thrust of the propellers is communicated to the ship.

BOILER BEARERS formed to the shape of the bottoms of the boilers are built into the boiler compartments to receive the boilers when ready for putting in place.

STERN TUBES AND BRACKETS.—All our modern battleships are fitted with twin screws, the shafts for which pass through the frames and plating under the counters. The frames have to be specially bent for this purpose, and are arranged to receive a steel tube, which is afterwards fitted with a gun metal tube to form a bearing for the shaft before it passes out of the ship. These frames are covered with steel plates following their curves, and carried out aft to form a casing over the stern shaft.

As the after ends of the propeller shafts must project considerably, they have to be supported by bearings outside the ship; for this purpose *propeller shaft brackets* are fitted. These were formerly wrought-iron forgings, but castings of steel are

Digitized by Google

now used. A bracket consists of two arms which meet at one end with an opening through which the propeller shaft passes; the other ends of the arms are flattened out and firmly built into the framing of the ship. The engine makers fit bearings for the stern shafts in the holes through the brackets.

RUDDER.—The rudder of a battleship usually consists of a strong framing of wrought-iron or of cast-steel which is filled in with wood, and plated over. The fore part is hung to the stern post by suitable pintles, and the neck passes up into the ship through a stuffing box and gland. The rudder head is fitted inside the ship with a *yoke* or *tiller*, which can be worked by hand steering gear, or by a special steam steering engine. The whole of the steering gear is arranged so as to be below the armour deck. In some cases *balance rudders* are fitted; in these one-third of the rudder area is forward of the vertical line through the points of support, and the pressure on this part tends to balance the pressure on the after part, and so make the rudder easier to work when the ship is moving quickly through the water. In the new cruisers $\frac{2}{3}$ths of the total rudder area is on the foreside of the axis.

So far the above description holds good for a great number of battleships, but as the disposition of the armament and armour plating varies very considerably in different ships, the necessary structural arrangements vary also.

In some ships, which have their sides about the water line wholly armoured, the armour shelf is carried fore and aft the ship. The armour extends to about five feet below the water line, except forward, where it is carried down to strengthen the bow near the ram.

In other cases the water line and sides near the middle of the ship alone are protected by armour; the armour deck forming the only protection fore and aft of this. In ships of this class armour plating about 18 inches thick is disposed so as to protect the armament in a central tower or *citadel*, which

Digitized by Google

extends, in different cases, from about one-third to two-thirds of the length of the ship.

In citadel ships the framing below the armour deck amidships must necessarily be made deeper and stronger than in the unprotected parts, and is covered with plating to which the backing and armour are secured. For the unprotected parts the framing is made lighter, and covered with plating about ½ inch thick.

ARMOUR.—The armour used for English battleships is usually *compound* armour plating. It is made by covering a thick plate of wrought-iron with a hard steel face. The iron possesses the necessary toughness and prevents the plate cracking when struck, while the hard steel face is designed to break up the projectile, and keep it from entering the plate. A compound armour plate of the best quality is said to require 20 per cent more energy to pierce than a good iron armour plate of equal thickness.

Compound plates up to 20 inches in thickness are used for the armour of citadels, turrets, etc. In the older ships, iron armour alone was used, being in some cases put on in two thicknesses with wood between.

BACKING.—The parts of the ship which are to be armoured are covered first with *teak backing*. This, with its supports of steel frames, etc., assists the armour plating in resisting the effects of projectiles.

The armour plates for H.M. ships are made principally by three firms at Sheffield, Messrs. Brown, Vickers, and Cammell. Moulds are sent to the steel works of the shape the plates are required to be, and they are delivered cut and bent to the necessary shape ready for putting in place. They are fastened to the ship's side by bolts which pass from the inside of the ship, through the inner plating and backing into holes drilled and tapped into the side of the plate nearest the ship, being held on the inside of the inner plating by nuts. Washers of

Digitized by Google

india-rubber are put under the nuts to make the fastening elastic, and prevent the bolt breaking should the plate be struck by a projectile. With the same object the bodies of the bolts are made smaller in diameter than the ends; the bolts are also in some cases lengthened, and a long steel sleeve put between the inner plating and the nut.

COAL ARMOUR.—In some of our ships the supply of coal carried is stowed in such a manner as to give additional protection to the vulnerable parts.

TURRETS AND BARBETTES.—The earlier battleships were chiefly *broadside* ships, their heavy guns were carried in a central armour-plated *battery* and fired on the broadside. Modern ships carry fewer but heavier guns, and they are either placed in *turrets*, which are *revolving* armoured towers, allowing a great arc of training to the guns, and giving great protection to the guns and guns' crews; or they are fitted to work over the top edges of *fixed* armoured towers called *barbettes*.

A TURRET is built up of a circular framework of steel which revolves on rollers on a *roller path* fixed to the deck under it. The outside of the turret, where exposed to fire, is covered with backing and armoured similarly to the ship's side. Turrets are usually built to hold two guns which work side by side on slides attached to their bottom framework. The muzzles of the guns work through ports cut in the wall of the turret, and the guns are sighted by means of protected openings in the top of the turret. The framework at the bottom is fitted with a circular *rack*, by which it can be revolved by means of a *pinion* worked by a special steam or hydraulic engine.

There are two methods of holding a turret in place, and of receiving the thrust of the guns when they are fired. One is to build a tube in the middle of its bottom framework to fit over and revolve around a strong *trunk* firmly fixed to the deck. In this case ordinary conical *rollers* are used attached to bars which radiate from a ring at the bottom of the turret; these revolve on

Digitized by Google

a carefully prepared *roller path* fixed to the deck, and the underside of the framework of the turret which rests on the rollers has also a carefully prepared roller path.

An improved method, which is adopted in modern ships, is to make the rollers with *flanges* which project over the outer and inner edges of both roller paths, and so hold the turret in place. The rollers in this case are attached to radial bars in a circular frame called a *live roller ring*.

The base of the turret with its turning and loading gear is protected by the citadel armour, and by the glacis plates on the upper deck through which the turret works.

Water is prevented from entering the ship through the space between the turret and deck by leather flaps attached to the turret and revolving with it; the flaps being held down to the deck by weights and by special screws, which are also used to raise them when necessary.

Some turret ships carrying two turrets, including the earliest and largest types, have them arranged so that their centres agree with the middle line of the ship. In others the turrets are placed in the citadel so that one is in the port forward part, and the other in the starboard after part: by this arrangement both turrets can have direct ahead or astern fire.

BARBETTES are armoured pear-shaped structures usually fixed one forward and one aft in the ship. One or two guns are placed in each, which work round on turn-tables revolved by special engines. These guns have a large arc of training, and are fired over the top of the armoured wall. In the older barbette ships an armoured tube leads from the armour deck to the breech end of the guns when they are in the loading position; but in the new ships each barbette stands on the top of a separate armoured redoubt, and the ammunition tubes are not necessary.

The barbette system exposes the guns to a greater extent than the turret system; but the guns may be carried higher above the water line and fought in a heavy sea.

Digitized by Google

Besides the *heavy* guns, in both cases, an *auxiliary* armament of lighter guns is carried.

In the newest ships, either turret or barbette, the principal armament is placed in two *separate* redoubts or towers.

These are protected by compound armour 17 inches thick, and have each their own loading arrangements, etc., independent of the other. By this means the possibility of total disablement as a fighting machine is much less than it would be in a ship with a single protected station.

The parts about the water line are protected by 18 inch armour for about two-thirds the length of the ship, and the part of the side between the armour deck and the deck above it, between the redoubts, is armoured by plates 5 inches thick. These ships have also a very complete auxiliary armament of 6-inch quick-firing guns in the space between the redoubts, six guns being carried on the main deck and four on the spar deck. Heavily armoured transverse bulkheads are also fitted for protection against fore and aft fire.

CONNING TOWER.—This is a tower built into the ship so as to command a clear all-round view, and having its sides and top armoured. It is fitted with steering gear and all the necessary telegraphs and methods of communication to important parts of the ship.

MASTS, ETC.—Battleships have usually two masts; these are made of steel plates about ½ inch thick, bent to a circular form and connected to each other by steel bars of T section, the edges of the plates being riveted to the top of the T. The masts are stiffened by horizontal cross stays fitted to the T steels, and being hollow are always utilised as ventilators.

Each mast is usually fitted with a *derrick* for hoisting in and out boats and other heavy weights, with a *military top* from which machine guns can be fired, and a light topmast for signalling purposes.

Digitized by Google

BILGE KEELS, about 2 feet deep, are generally fitted one on each side of the ship for about two-thirds of the length, to prevent excessive rolling; they also strengthen the ship longitudinally. They are usually made of two lengths of steel plates, the inner edges of which are fastened to the outer bottom plating by angle steels; their outer edges are riveted together, and the space between them is filled in with wood.

WATER BALANCE CHAMBERS are fitted to some of our ships. They extend across the inside of the ship in a suitable position, and are partially filled with water. When the ship is rolling in a seaway, the water being free, lags behind the motion of the ship, the greater part of it reaching the lower side with each roll just as it commences to rise. This has the effect of considerably checking the rolling.

SHEATHING.—Some of our battleships have their outside plating below the water line covered with wood and coppered. This is done with a view to prevent the fouling which takes place rapidly on the bottom plating of iron and steel ships, rendering it necessary to dock them frequently. In this case the stem, stern post, etc., are usually of phosphor bronze.

The descriptions given above of the various parts of the hull are very brief; these with a great many other details and fittings of ships are fully explained in the *Text Book of Naval Architecture*, by Mr. J. J. Welch, of the Royal Corps of Naval Constructors.

Digitized by Google

Digitized by Google

INDEX

Absolute pressure, 187, 236
Addendum of toothed wheels, 85
Air casing, 153
  fans, 141
  furnace, 14
  locks, 279
Air pump, 127, 230
  barrel of, 204
  lever of, 204
  rod of, 204
Angle-iron joint, 30
Angular advance of eccentric, 224
Area of circle, formula for, 7
Armour, 281
  deck, 274, 275
  shelf, 271, 275
Artificial draught, 179
Asbestos cloth, 114
  packing, 108
Ash pan, 151
Ash-pit door, 151
Automatic feed regulation, 197
  stop valve, 189
Auxiliary feed valve, 194
  starting valve, 210
  stop valve, 189
Average pressure of steam on piston, 237, 253

Babcock and Wilcox boiler, 165
Back of boiler, 149
  pressure, 250
  tube plate of boiler, 150
Backing, for armour, 281
Balance piston, 220
  rudders, 280
Ball bearings, 101
  valves, 127
Band brake, 105
Barbettes, 282, 283
Bearing bars, 151
Bearings, 62, 74, 214
Bed plate of an engine, 204, 214, 279
Belleville boiler, 158, 197
Bending force, 8
Bessemer steel, 17
Bevel wheels, 86
Bilge keel, 285
Blast furnace, 12
Blister steel, 16
Blow-out valve, 197, 234
Body plan of ship, 267
Boiler bearers, 279
Boilers, advantage of cylindrical over square type, 146
  advantages and disadvantages of water-tube, 172, 175
  different types of, 149
  fittings, 188
Bolts, 43
  of main bearings, 204, 214
Boss of screw propeller, 257
Bourdon's pressure gauge, 194
Boyle's law, 236
Brakes, 105
Brass, 25
Brasses, 62, 70, 213, 214
Brazing, 113
Breaking strength, 9
Breast hooks, 277
Bridge of furnace, 151
  of stop valve, 118
Brine valve, 197, 234
Bronze, 22
Bucket valves of air pump, 204
Bulkheads, 277
  complete, 278
  partial, 278
Bushes, 69
Butt riveting, 30
  strap, in riveting, 30

Calipers, outside and inside, 4
Cams, 81
Capillary attraction, 98
Caps of main bearings, 204, 214
Carbon in coal, 178

Digitized by Google

Carbonic acid gas, 179
oxide, 179
Case hardening, 15
Cast-iron, 13
Cast-steel, 16
Caulking, 114
Cementation, method of, 16
Centrifugal pump, 141
Changes in water passing through engines and boilers, 234
Chilled castings, 13
Circulating pump of a condenser, 230
Citadel, 280
Clearance of piston, 213
Clutches, 62
Coal, composition of, 178
armour, 282
filters, 177, 198
Cocks, 117, 128
method of showing whether open or shut, 131
Coffer dams, 278
Collision bulkhead, 277
Columns of engines, 204
Combustion of coal, 178
chamber, 150
Compound engine, 237, 238
Compressive stress, 8
Condensation of steam, 229
Condenser, 229
air pump, 127, 204, 230
Conduction, 185
Conical valve, 127
Connecting rod, 69, 70, 73, 204, 213
Conning tower, 284
Constants, useful, 7
Convection, 185
Conversion of motion, 73
Converter, use of, 17
Copper, 20
wire gauze, 114
Corrugated furnace, 150
Cotter, 55
Countersunk rivet, 30
Couplings, flange, 61, 214
Crank, 73, 213
arms, 74, 214
Crank pin, 74, 204, 213
bearing, 204, 213
Crank shaft, 74, 204, 213
bearing, 204
Crosshead pin, 70, 213
of piston rod, 204, 213
Cup leather, for Bramah press, 108
for hydraulic jack, 136
for hydraulic piston, 113
Cylinder and its fittings, 204, 209, 217
cover, 209
jacket, 204, 209
liner, 209
Cylinder ports, 127, 217
Cylindrical surfaces, how measured, 4

Dampers, 153
Dead points, 74
Débris deck, 277
Deck beams, 275
Delivery valves of air pump, 204
Density of brine, 198
Derrick, 284
Diameters of rivets, 39
Disc valve, 127, 132
Disconnecting gear, 62
Distillation, 234
Double acting force pump, 135
bottom, 274
cup leather, 113
ended type of boiler, 154
lock nuts, 55
ported slide valve, 218
threaded screw, 44
Drain cocks, 209
pipe, 190
Draught plate, 151
Driver of toothed wheels, 86
Ductile, definition of, 15

Eccentric rod, 74, 204, 224
strap, 74, 224
Eccentrics, 74, 127, 224
Economy in use of compound engines, 241
Efficiency of the marine steam engine, 263
Ejector, 141
Elastic core packing, 108
Elasticity, limit of, 9
Element of a Belleville boiler, 158
Engine bearers, 279
framing, 204
Engines of H.M.S. *Sappho* and *Scylla*, 242
Escape valves, 128, 209
Evaporation, 185
Evaporator, 234
Exhaust or outlet pipe, for steam, 204, 229
port of cylinder, 217, 220
Expansion joint, 199
of steam, 236

Factor of safety, 9, 10
Feather of a valve, 118, 127
of an axle, etc., 62
Feathering screws, 261
Feed collecting tube, 161
pipes, 233
pumps, 233
tank, 233
valves, 233
Ferrules for boiler tubes, 183

Digitized by Google

Filling piece for piston, 103
Filters for feed water, 177, 198
Fittings of boilers, 188
Flange coupling, 61, 214
  joint, 30
  of pipe, 113
Flank of toothed wheels, 85
Flat surfaces, how measured, 4
Flats of ships, 278
Fly-wheel, 74
Follower of toothed wheels, 86
Foot valves of an air pump, 204
Force pump, 135
Forced draught, 141, 180
Formation of screw thread, 40
Friction, definition of, 97
  examples where taken advantage of, 102
  how reduced, 98
  clutch, Weston's, 102
  wheels, 101
Front of boiler, 149
  tube plate, 150
Fullering, 114
Funnel, 153
  exhaust, 183
Furnace bars, 151
  doors, 151
  of boiler, 150
Fusible plug, 157

Galvanic action, 22
Galvanised iron, 22
Garboard strake of a ship, 273
Gas and fine threads, 44
Gasket, 108
Gauges, ring and plug, 4
Gland, 107, 230
Glass water gauge, 190
Grate surface, 151
Guard for nuts, 55
  for valve, 127
  ring of piston, 210
Guide blocks, 204, 213
Guides for piston rod, 73, 204, 213
  of slide valve rod, 81, 213, 223
  of a valve, 118, 127
Gun metal, 22

Half block model of a ship, 268
  breadth plan of a ship, 268
Hand riveting, 29
Heating surface, 150
Helical gearing, 86
High pressure cylinder, 237, 241
Hollow shafting, advantage of, 61
Hooke's joint, 61
Horizontal engines, 203
Horse power, 245
Hot bearings, 101
Hydraulic jack, 136
Hydrogen in coal, 178
Hydrometer, 198

India-rubber disc valve, 127
Indicator, 246
  diagrams, 250, 254
  pipe, 210
Inner bottom plating, 272
  keel plates, 270
Intermediate pressure cylinder, 241
Internal steam pipe, 189
Iron, 11

Jacket steam pipes, 210
Jaw clutch, 62
Jet condenser, 234
Joints of working rods, 69
Journal, 22, 62
Junction box, 161
Junk ring bolts, 210, 217

Keys, 61
Knuckle joint, 69

Lagging, 153, 199, 209
Lap of a slide valve, 223
Lap riveting, 30
Latent heat, 185
Launching ships, methods of, 269
Laying and lighting fires, 184
Lead of a slide valve, 223
Left-handed threads, 43
Lift of a valve, 118
Lift pump, ordinary, 135
Lifting gear for safety valves, 190
  link, 224
Lignum vitæ bearing, 69
Limit of working of pump, 136
Liners, 62, 258
Link of reversing gear, 204
  block, 224
  motion, 127, 224
Lock nuts, 55
Locking arrangements for nuts, 55
Locomotive type of boiler, 157
Longitudinal bulkheads, 277
  frames, 271
Low pressure cylinder, 237, 241
Lubricants, 98

Machine riveting, 29
Main bearings, 74, 204, 214
  feed valves, 194
  steam pipe, 199
  stop valve, 188
Make-up water, 233
Malleable, definition of, 15
  cast-iron, 19

U

Digitized by Google

Manganese, 17
• bronze, 25
Manholes of boiler, 152
of double bottom, 275
Masts, 284
Mean pressure of steam on piston, 237, 253
Measurements, methods of making, 3
Mechanical work, 245
Metallic packing, for glands, 108
for pistons, 108, 210
Metallic valves, 127
Methods of launching ships, 269
Midship section of ship, 268
Mild steel, 17, 152
castings, 18
Military top, 284
Mitre wheels, 86
Mortice wheels, 86
Motion, direction of, how changed, 90
Mould loft, 268
Mudholes of a boiler, 152
Muntz metal, 25

Natural draught, 179
Naval brass, 25
Niclausse boiler, 166
Non-return valves, 127
Nuts, 43

Oil, 98
Oil-way, 69
Outer bottom plating, 272
keel plates, 269
Oval type of boiler, 153

Packing, 107
ring of piston, 204, 217
Pan-shaped head of rivet, 29
Pedestal bearing, 62
Phosphor bronze, 25
Pig-iron, 12
Pinion, 86
Pipe joints, 113
Piston and its parts, 173, 204, 210, 217
rod, 73, 204, 213
slide valve, 220
Pitch of a screw propeller, 261
of screw thread, 43
of a tooth, 85
circle of toothed wheels, 85
Plug of a cock, 128
Plummer block, 62
Point of toothed wheels, 85
Ports or passages of a cylinder, 127, 217
Power, transmission of, 56
Preservation of boilers, 176
Pressure gauge, 193
Priming, 189, 200
Profile of a ship, 268
Propeller, 257
shaft brackets, 279
Proportion of strength of riveted joints, 39
Puddling of iron, 14
Pumps, 132
Purves furnace, 150

Quadruple expansion engine, 242

Rack and pinion, 86
Radiation of heat, 153
Reciprocating motion, 73
Red lead cement, 114
Regulating valve, 188, 204
Relief valves, 128
Return tube boiler, 149, 154
Reverberatory furnace, 14
Right-handed thread, 43
Rivet, 26
heads, forms of, 30
holes, how made, 29
Riveted joints, 26
Root of toothed wheels, 85
Rotatory motion, 73
Rough sketches of screws, how made, 55
Rudder, 280

Safe working load, 9
Safety valves, 128, 190
Salt water for boilers, 234
Scale on boiler plates, 235
Screw, definition of, 40
propeller, 257
rivet, 30
Scum valve, 197
Sediment chamber, 162
Self-closing stop valve, 189
Sensible heat, 185
Separator, 200
Set screw, 55
Shafts, strength to resist twisting, 56
Shear steel, 16
Shearing force, 9
Sheathing for ships, 285
Sheer plan of a ship, 267
Sheet insertion, 114
Shell of boiler, 149
of a cock, 128
Sideway cock, 131
Siemens-Martin steel, 17
Simple engine, 238
Single acting force pump, 135
threaded screw, 44
Siphon lubricator, 98
Slide jacket, 118, 217
Slide valve, ordinary, 118, 217
double ported, 218
guides, 223
how worked, 223

Digitized by Google

Slide valve, piston, 220
rod, 81, 127
Slide valves, how arranged, 227
Slip of a screw propeller, 261
Smoke box of boiler, 153
Snap tool for rivet heads, 29
Sole plate of an engine, 204, 214
Spelter, 113
Spiegeleisen, 17
Split pin, 55
Spur wheels, 85
Standard gauges, 4
Starting engine, 224
Stay tubes of a boiler, 152
Stays of a boiler, 151
Steam blast, 179
Steam space of a boiler, 151
Steel, 15
springs for piston, 210
Stem of a ship, 272
Stern post of a ship, 272
tube of a ship, 279
Stop valve, 117
Stops, 61
Straight edge, 4
Straightway cock, 131
Strain, definition of, 8
Stress, definition of, 8
Studs, 55
Stuffing box and gland, 107, 213, 230
Surface condenser, 229
plate, 4

Tempering, 18
Templets, 7
Tensile strain, 8
Test cocks, 193
of boilers, 152
Thermal unit, 186
Thickness of boiler plates, 152
Thornycroft boiler, 158, 171, 197
"Daring" type, 172
Threads, how made, 43
different shapes of, 43
Three-way cock, 131
Throttle valve, 188, 204
Through tube boiler, 154
Thrust bearing, 258
Tin, 21
Tongue piece of piston, 210
Tool steel, 15
Toothed gearing, 82
Torsional or twisting force, 8
Total heat of evaporation, 186, 236
Trains of toothed wheels, 86
Transmission of power, 82
Transverse bulkheads, 277
Transverse frames, 270
Triple expansion engine, 241
Truly flat surfaces, how obtained, 4
Tube plates of a boiler, 150
of a condenser, 230
Tubes of a boiler, 150
of a condenser, 230
Tubulous boilers, 157
Turrets, 282
Twin screws, 262

Ultimate strength, 9
Underwater bearings, 69
Unit of heat, 186
of work, 245
Universal or Hooke's joint, 61
Uptake of boiler, 155

Vacuum, 229
gauge, 233
Valve faces of cylinders, 223
Valves, 117
Velocity ratio of two axes, 89
Vertical engines, 203
keel, 270
Volume of cylinder, formula for, 7
Vulcanised india-rubber, 127

Washer, 69
Waste steam pipe, 190
Water balance chamber, 285
line of boiler, 151
lubrication, 101
pressure, test of boiler, 152
space of boiler, 151
Water-tight bulkheads, 277
doors, 278
frames, 274
Water-tube boilers, 157
advantages and disadvantages, 172, 175
Weigh shaft of reversing gear, 204
Welding, 15
Weston's friction clutch, 102
White metal, 62, 101
Whitworth fluid compressed steel, 18
thread, 44
Wing passage bulkheads, 278
Work, 245
Worm and worm wheel, 90
Wrought-iron, 14

Yarrow type of boiler, 172, 197

Zinc, 21
slabs in boiler, 176

Printed by R. & R. Clark, Limited, *Edinburgh.*

Digitized by Google

Digitized by Google

"BRITANNIA" SCIENCE SERIES.

Edited by Rev. J. C. P. ALDOUS, M.A., late Fellow of Jesus College, Cambridge, formerly Chief Instructor H.M.S. *Britannia*.

Britain's Naval Power. A Short History of the Growth of the British Navy from the earliest times to Trafalgar. By HAMILTON WILLIAMS, M.A., Pembroke College, Oxford; Instructor in English Literature to Naval Cadets in H.M.S. *Britannia*. Part I. 4s. 6d. net. Part II. History and Development of the Navy to the Present Day. 4s. 6d. net.

TIMES.—"Written mainly for youthful readers and well calculated to instruct, enlighten, and interest them. It is a plain, simple record, lucid, judicious, and impartial."

SATURDAY REVIEW.—"Precisely the book that was wanted. The story of patriotic spirit and heroic endurance inseparable from the history of the British Navy is admirably told in this volume."

SPECTATOR.—"We can praise the brightness of the narrative and the skill with which a difficult subject is made to assume a narrative form."

Science and Art Drawing. COMPLETE GEOMETRICAL COURSE consisting of Plane and Solid Geometry, Orthographic and Isometric Projection, Projection of Shadows, the Principles of Map Projection, Graphic Arithmetic, and Graphic Statics. By J. HUMPHREY SPANTON, Gold Medallist of the Royal Academy, Instructor in Drawing to Naval Cadets. 8vo. 10s. net.

JOURNAL OF THE ROYAL INSTITUTE OF BRITISH ARCHITECTS.—"Mr. Spanton's goodly volume, viewed as a treatise on Geometrical drawing, is excellent, and gives everything that a student would be expected to require for the examinations which it contemplates. It is no mere elementary introduction, but a good solid treatise on the subject, entering fully into its more abstruse branches, such as the projection of shadows and interpenetration."

A Complete Perspective Course. Including Projection of Shadows and Reflections, Practical Hints for Sketching and Methods for Correcting Photographic Distortion. By J. HUMPHREY SPANTON, Gold Medallist of the Royal Academy; for the last thirty years Instructor in Perspective to Naval Cadets. 5s.

GLASGOW HERALD.—"The author shows great judgment in detecting and meeting the difficulties that puzzle a student who approaches the subject for the first time."

ENGLISH MECHANIC.—"To those who desire to learn how to draw in Perspective the work may be recommended, as the subject is treated as clearly and successfully as it possibly can be in a book."

MACMILLAN AND CO., LTD., LONDON.

Digitized by Google

"BRITANNIA" SCIENCE SERIES.

An Elementary Course of Physics. Edited by the Rev. J. C P. ALDOUS, M.A., formerly Chief Instructor, H.M.S. *Britannia*, late Fellow of Jesus College, Cambridge. Part I. Mechanics—Properties of Matter—Hydrostatics—Heat, by Rev. J. C. P. ALDOUS, M.A. 420 pp. 4s. 6d. Part II. Wave Motion—Sound—Light, by W. D. EGGAR, M.A., Assistant Master, Eton College. 220 pp. 2s. 6d. Part III. Magnetism —Electricity, by Professor F. R. BARRELL, M.A., B.Sc., University College, Bristol, late Instructor in Natural Science, H.M.S. *Britannia*. 230 pp. 2s. 6d. Complete in one volume. 7s. 6d.

GUARDIAN.—"A treatise which deals on a uniform plan with the whole range of physics is a great convenience both to teacher and student. . . . The present careful and elaborate compilation will, we expect, find favour with many schoolmasters. . . . The authors are thoroughly versed in the art of adapting their treatment to the capabilities of schoolboys."

NATURE.—"In this book an attempt is made to give a modern and practical course of natural philosophy in a compendious form, and it may be stated at once that the effort is a most successful one. . . . The treatment of the various subjects is most lucid and thorough, and is evidently based on an intimate acquaintance with the requirements of students. Great pains have been taken to avoid looseness of statement; and the fact that some of the sections have had the advantage of the criticisms and suggestions of Lord Kelvin, Lord Rayleigh, and others, makes it a trustworthy book of reference."

ACADEMY.—"The *Elementary Course of Physics* is again a work of quite a different kind. Hitherto the reader requiring a general account of the present state of physical science has gone to translations of the well-known books by Ganot and Deschanel, which have for many years had a wide popularity in this country. The volume now under our notice is an English attempt to meet such a student's requirements."

Physics Note-Book. Descriptions and Laws in Letterpress, with Space for Students' Drawings of Experiments. 4to. 2s. 6d. net.

KNOWLEDGE.—"The plan of the book will, it strikes us, serve two useful purposes, namely, the elimination of a good deal of writing in the laboratory, the time saved being available for actual experiment; and second, the necessary formulæ being given, time is again economised by obviating the irksome task of too frequent reference to books."

Lectures Maritimes. By LEON DELBOS, M.A. French Stories and Conversations on Nautical Subjects. 2s. net.

SATURDAY REVIEW.—"The worst of technical handbooks to a foreign language is exactly this, that expert and literary competence are very rarely found together. Here, so far as we can judge, they are so found, and the result is excellent."

SCHOOL GUARDIAN.—"These lectures . . . will be found very useful to any French student while not yet far advanced. The author has endeavoured to preserve throughout a conversational style, and has added specimens of official correspondence which cannot but prove very suggestive."

Sea Stories FOR FRENCH COMPOSITION. Collected and annotated. By LEON DELBOS, M.A. 2s. net.

SCHOOLMASTER.—"These spirited stories of sea life will form useful and interesting exercises for translation into French. At the foot of each page are notes on the rendering of difficult passages, and the last part of the book consists of some concise and lucid hints on French composition that add to the practical value of an already admirable book."

MACMILLAN AND CO., LTD., LONDON.

Digitized by Google

Digitized by Google

a

Digitized by Google

Jack
750 ver 2

Digitized by Google

b89089676936
B89089676936A

Digitized by Google

Digitized by Google

8908967693 6

b89089676936a